# EMERGENCY BATTERY BACKUP UNIT (95W, REMOTE CAPABLE) EL-7062S5




## Features

| | |
|---|---|
| Power on AC | 14-16W |
| Lamp Type | 2x5W LED |
| Input Voltage | 120/347 VAC |
| Frequency | 50/60Hz |
| Battery Type | Sealed Lead Acid |
| Working Time | 30 Minutes at 95W |
| Total Lumen Output | >/= 700 |
| Charging Time | 24 Hours |

## Description

- Durable 20 gauge steel housing
- CSA 22.2 Compliant
- Wall mountable
- Input Voltage: 120/347VAC 50/60Hz
- Super bright adjustable 2x5W LED lamps
- Emits over 700 lumens of total light
- 12V10Ah Sealed Lead Acid Battery
- CSA Backup time: 30 minutes at 95W
  Total calculated wattage at 90 minutes: 60W
  Total calculated wattage at 120 minutes: 40W
- Test switch and charge indicator light
- Overcharge & Over-discharge protection
- Suitable for damp locations
- Optional line cord included
- Operating Temperature: 5 ºC ~ 30 ºC / 41 ºF ~ 86 ºF

## Technical Drawing

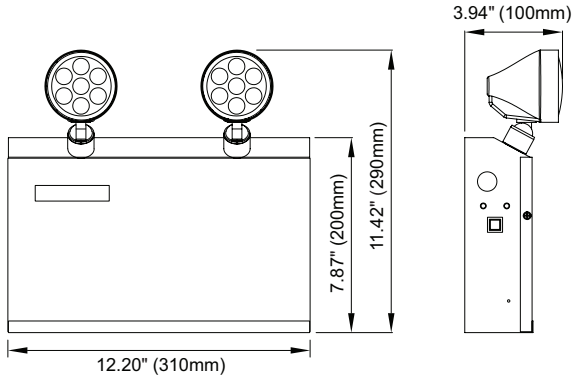


## Remote Add-ons

Unit comes with two attached 5W light heads. You can add on up to 85W of additional remotes for 30 minutes comprised of one or a combination of the following:



EL-7030A (1.5W)
EL-7030A5 (5W)



EL-7030B (3W)
EL-7030B10 (10W)



EL-7030AWP (3W)



EL-7030BWP (6W)

## Ordering Information

| Model | Description |
|---|---|
| EL-7062S5 | Emergency Battery Backup Unit - Steel (95W, Remote Capable), packed 5 per case/26.5 kg |

Mircom

**Canada**
25 Interchange Way Vaughan, ON L4K 5W3
Telephone: (905) 660-4655 | Fax: (905) 660-4113

**U.S.A.**
4575 Witmer Industrial Estates Niagara Falls, NY 14305
Toll Free: (888) 660-4655 | Fax Toll Free: (888) 660-4113

www.mircom.com

This document is provided by Mircom Technologies Ltd., MGC Systems Corp., or their affiliates, subsidiaries and brands, for convenience or marketing only and does not describe products or services technically. For technical information refer to technical manuals. We do not make representations or warranties regarding this information, including as to completeness or accuracy. We may change these contents at any time and reserve all rights in the contents, including copyrights, trademarks and other intellectual property. All other trademarks and registered trademarks are properties of their respective owners.

CATALOG NUMBER 4172
Rev. 1