PLACE FA-260TRBR TRIM RING OVER BACKBOX

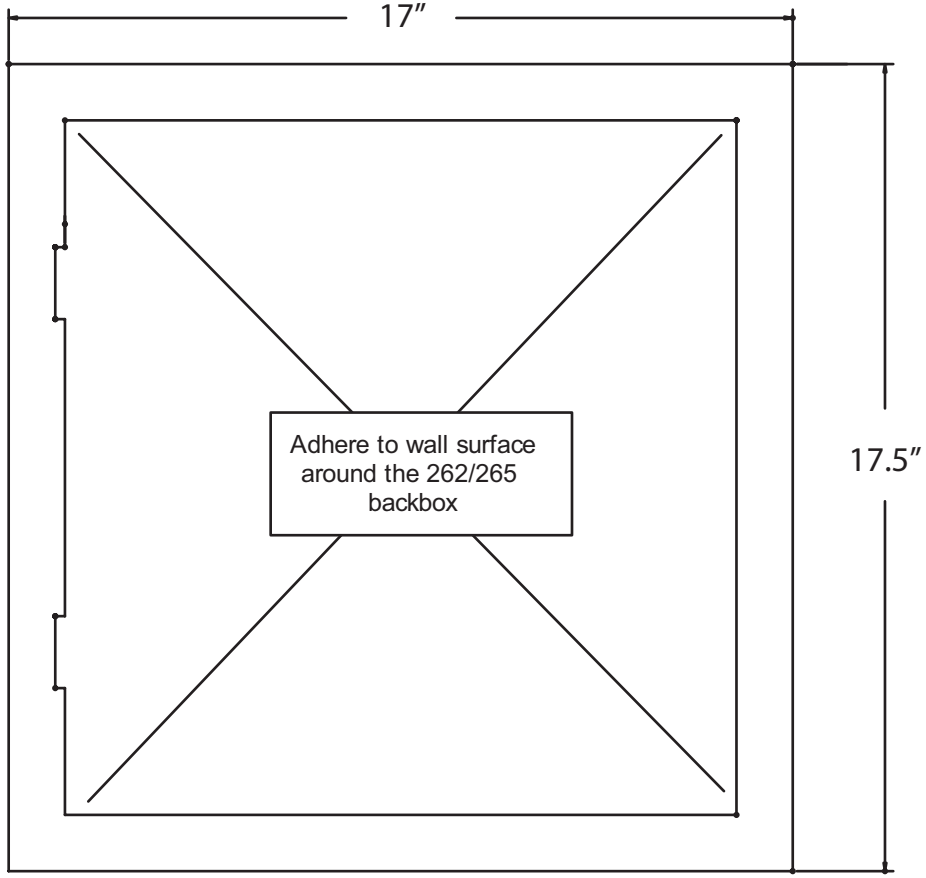

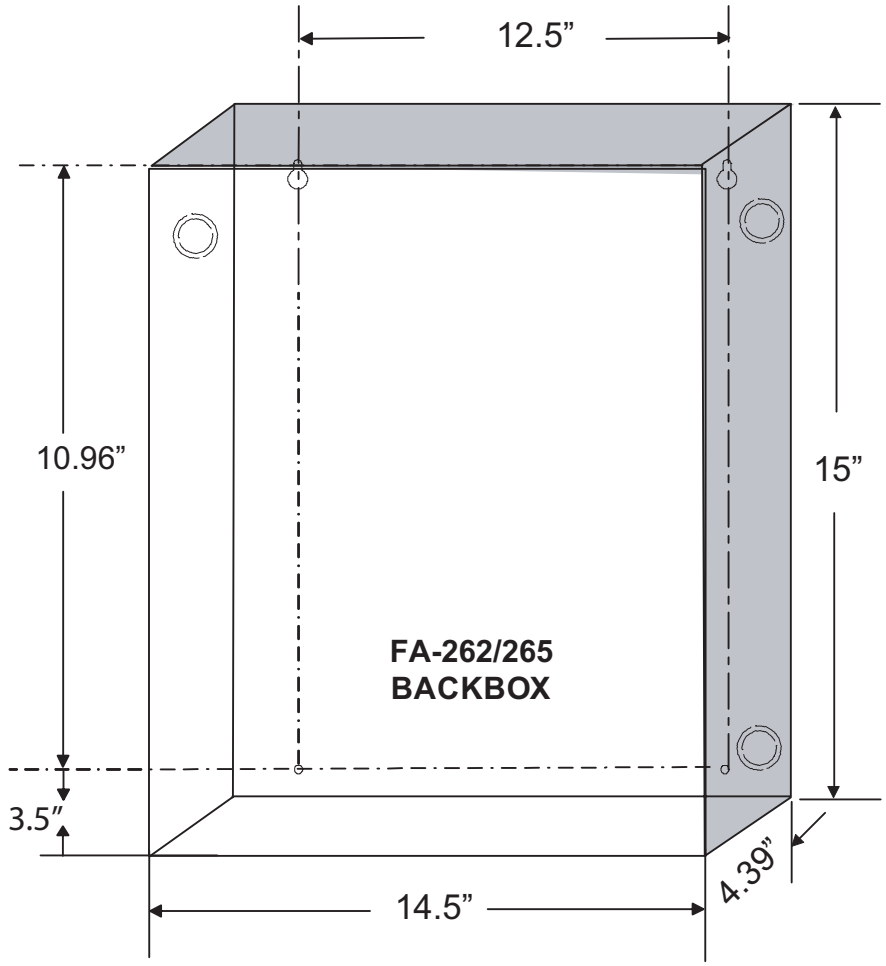

Notes:

- The minimum depth above the wall required for semi-flush mounting using the flush trim ring is 1”.
- The maximum depth for semi-flush mounting using the flush trim ring is 3.5”.

MIRCOM®
Advanced Life Safety Solutions℠

FA-260TRBR Semi-Flush Trim Ring For FA-262/265 Backboxes

LT-2041MIR Rev.0
August 2006