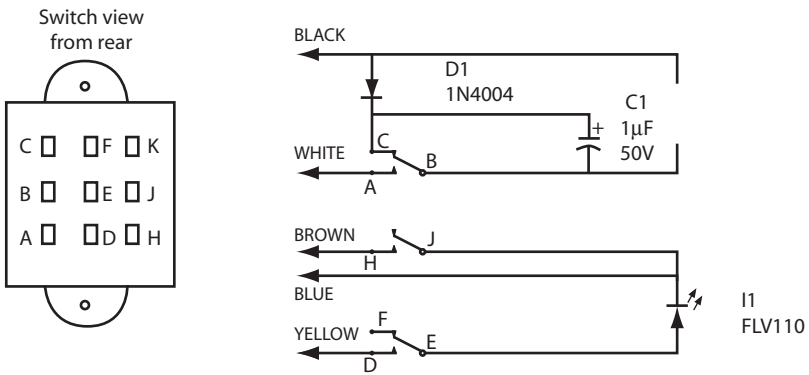

MIRCOM Advanced Life Safety Solutions

EC-103 Wiring Instructions

LT-451 Rev. 2
February 2005

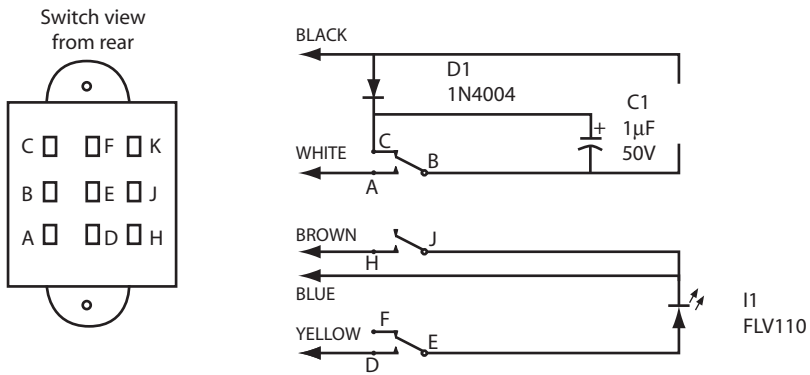

MIRCOM Advanced Life Safety Solutions

EC-103 Wiring Instructions

LT-451 Rev. 2
February 2005

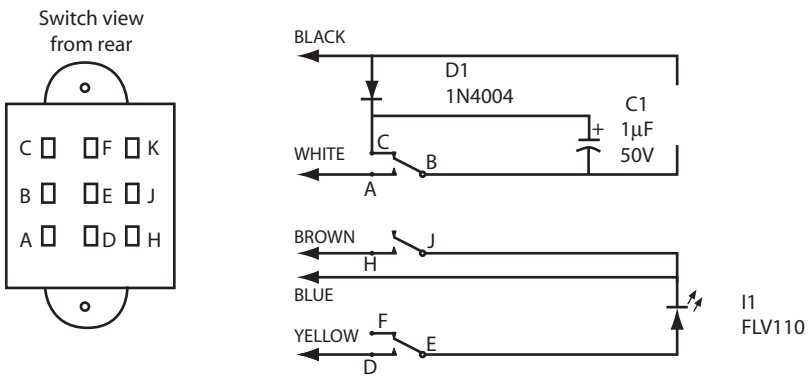

MIRCOM Advanced Life Safety Solutions

EC-103 Wiring Instructions

LT-451 Rev. 2
February 2005

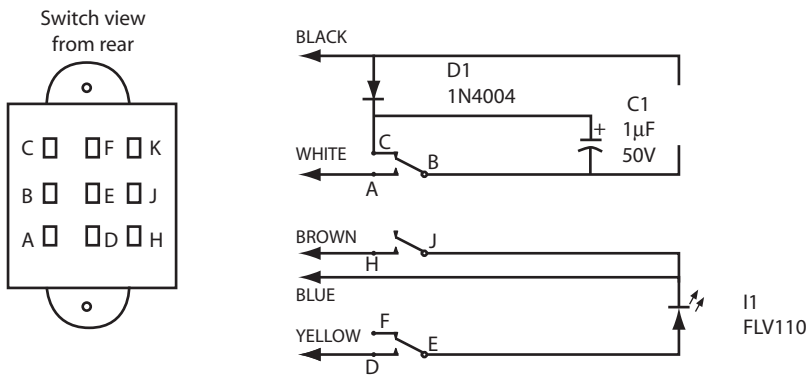

MIRCOM Advanced Life Safety Solutions

EC-103 Wiring Instructions

LT-451 Rev. 2
February 2005