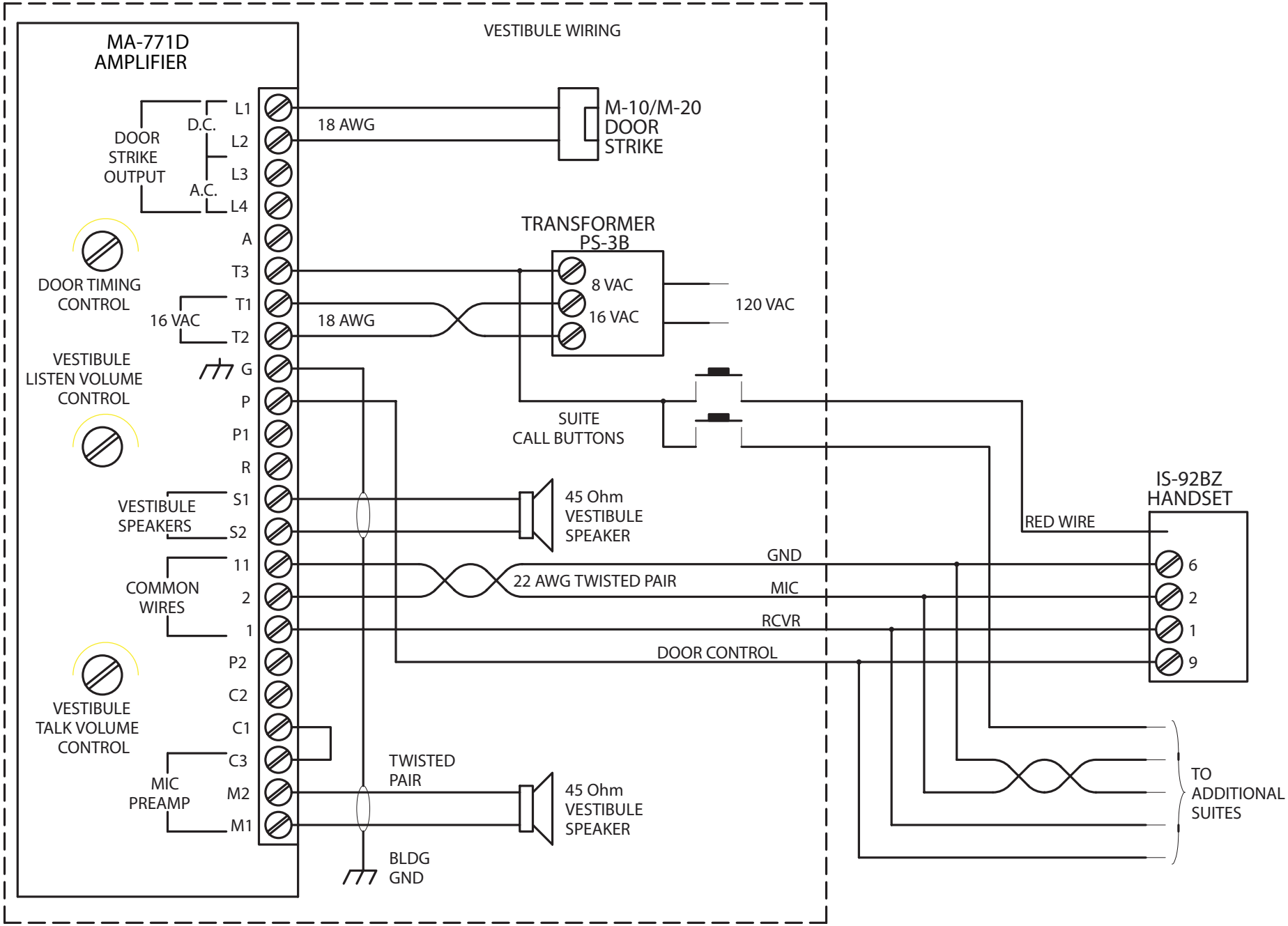

MIRCOM®
Advanced Life Safety Solutions™

SINGLE VESTIBULE CONNECTION
DC DOOR STRIKE OPERATION

DOC. No.: LT-637 REV.0