TX3-PLE Postal Lock Installation

Included parts:

1 x postal lock enclosure with switch and wires

2 x #8-32 nuts for securing postal lock

1 x postal lock cover and 6 x #6-32 0.5 flat screws

1 x postal lock mounting plate and 2 x #6-32 0.25 flat tamper-resistant screws

1 x key for tamper-resistant screws

A. Operation

The TX3-PL-ENCL Post Office Lock Enclosure permits the postal worker to use their key to enter the building (when used with Post Office supplied lock).

B. Dimensions

Front

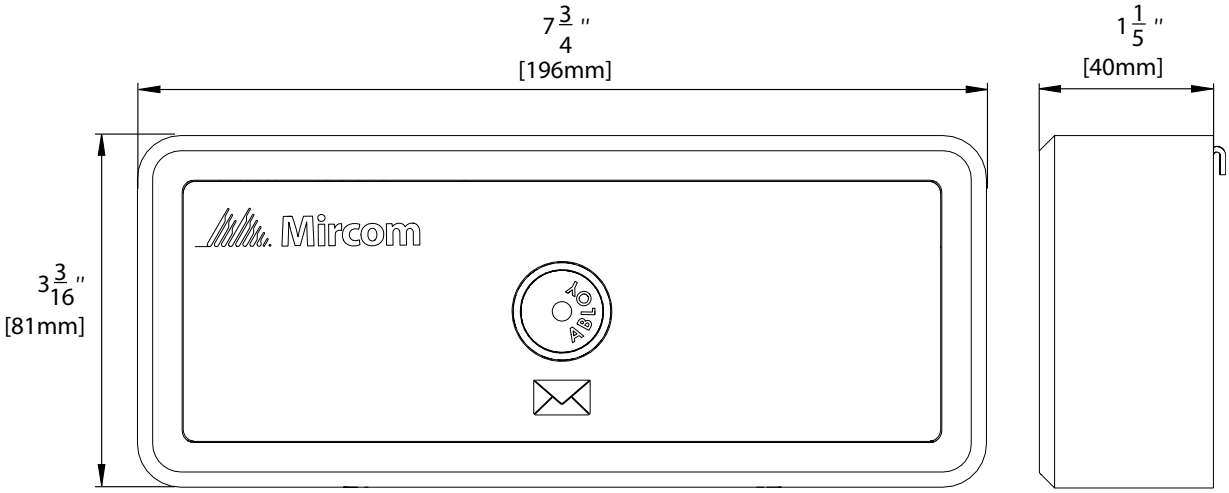

Back

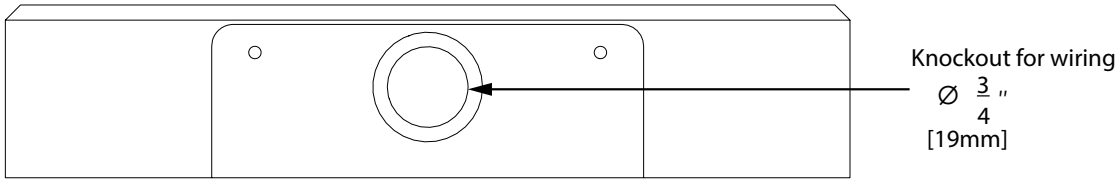

There are Two Types of Postal Lock

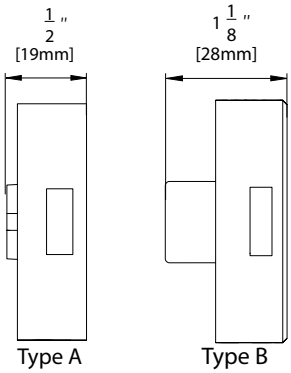

Mounting Plate (back view)

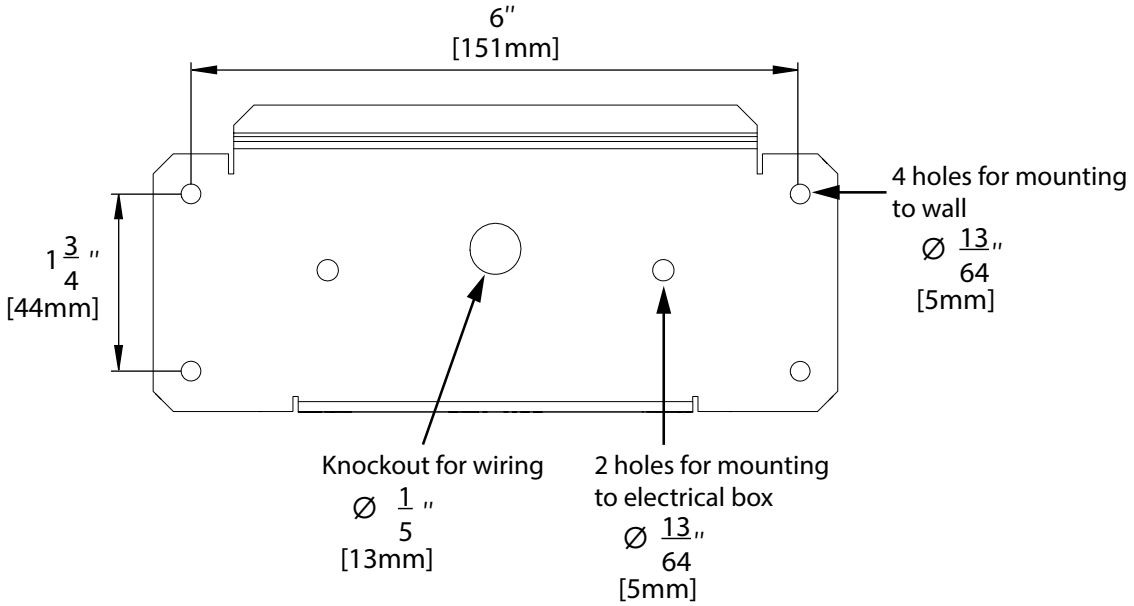

C. Install the Postal Lock

1. Route the wires through either the knockout on the back or on the bottom.

   Note: If it is not possible to use the knockout on the back, use the knockout on the bottom and route the wires through a conduit.

2. Follow the instructions on the following pages to install a postal lock of either type A or B.

Install Postal Lock Type A

The switch is factory installed on the outer hole to accommodate postal lock type B. If you have postal lock type A, you must move the switch to the inner hole.

1. Remove the switch and nut from the enclosure.
2. Insert the switch into the inner hole on the enclosure and secure it with the nut on the inside.
3. Place the postal lock in the postal lock enclosure and secure it with the two nuts provided. Ensure that it engages the postal lock switch.

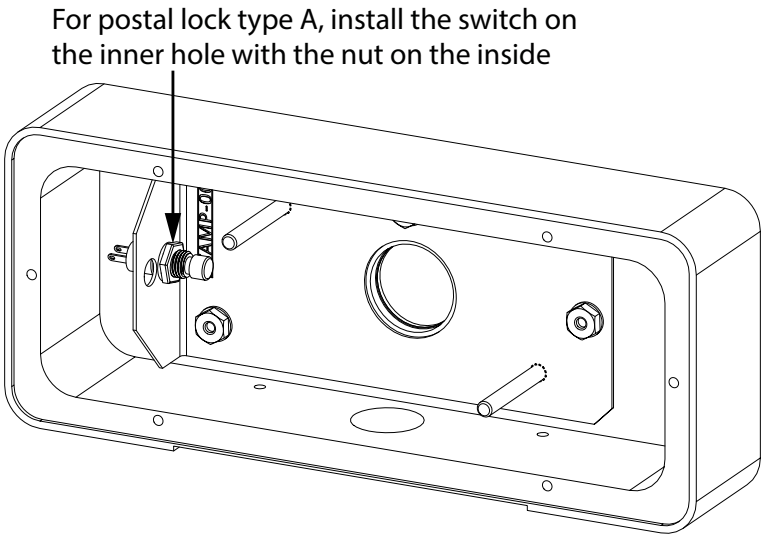

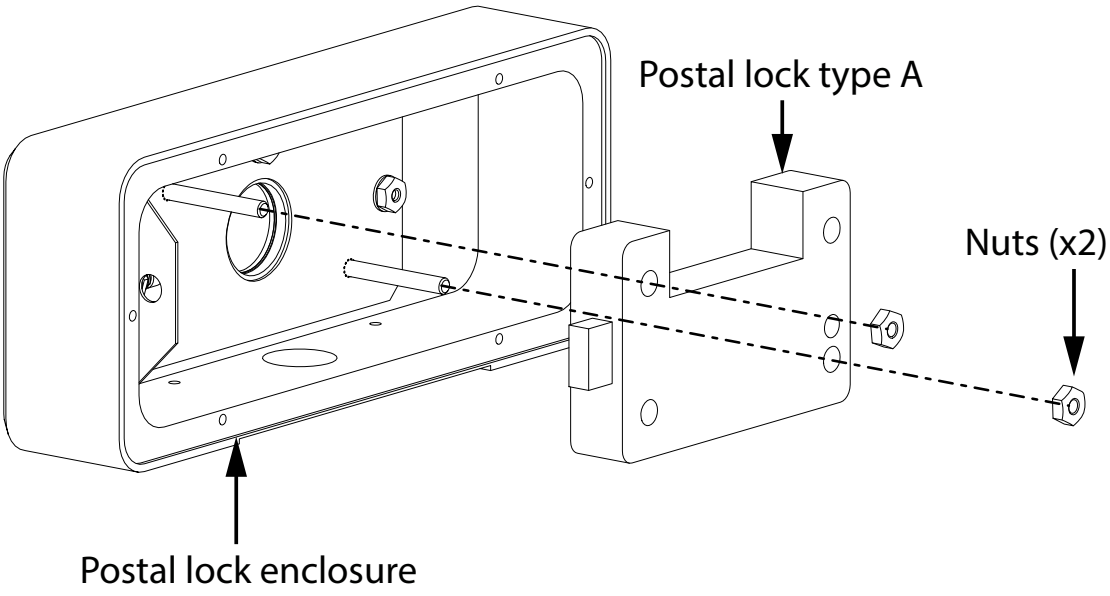

Install Postal Lock Type B

1. Place the gasket in the postal lock enclosure.
2. Place the postal lock in the postal lock enclosure and secure it with the two nuts provided. Ensure that it engages the postal lock switch.

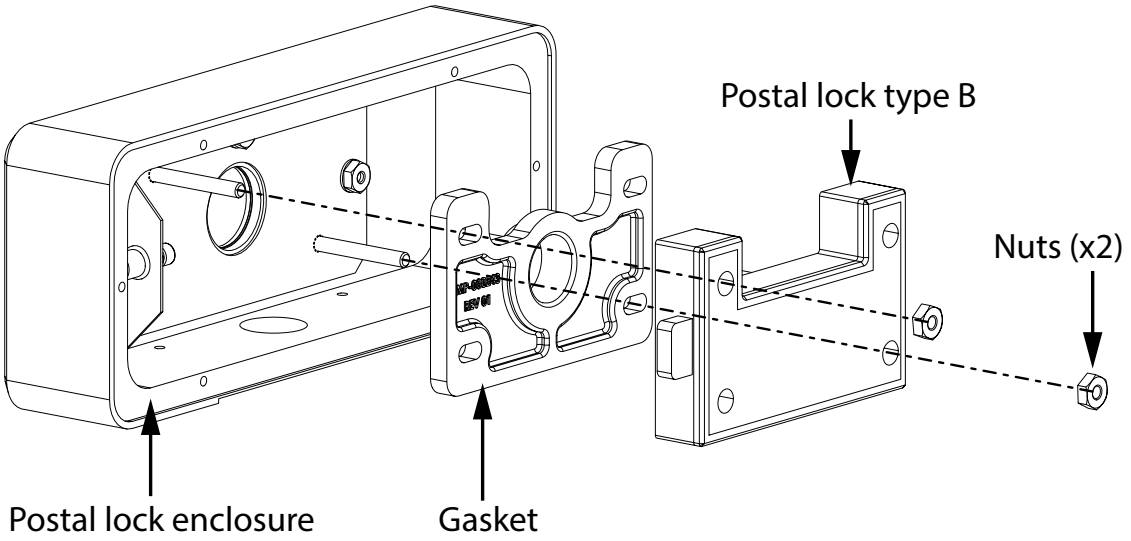

D. Attach the Cover

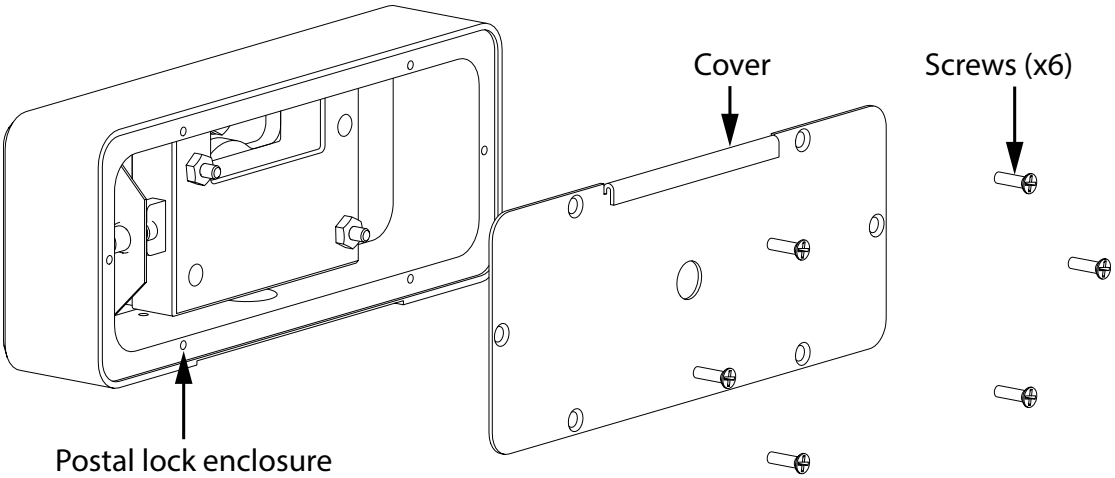

E. Attach the Mounting Plate

1. Mount the mounting plate on the wall with appropriate fasteners.
2. Slide the postal lock enclosure on to the mounting plate.

   The mounting plate goes under the lip on the back of the enclosure as shown below.

3. Secure the postal lock enclosure to the mounting plate with the 2 screws.

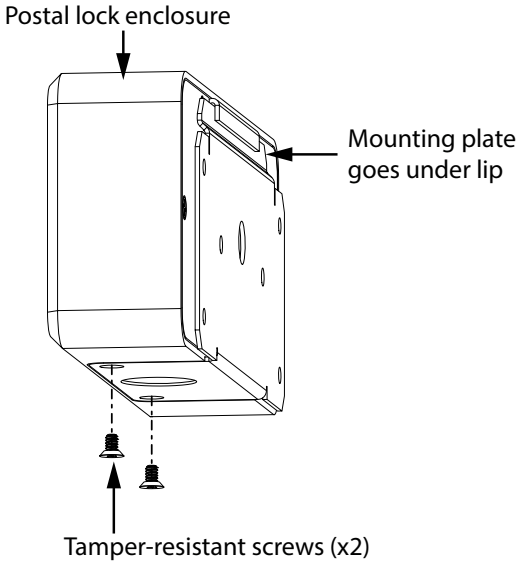

Wire the Switch

Connect the 2 wires (22 AWG) from the postal lock switch to the access control unit. See the control unit's documentation for instructions.