FA-300 Series

LED Fire Alarm Control Panel

Installation and Operation Manual

LT-905 Rev. 12
January 2023

Table of Contents

1.0 Industry Canada and FCC Notice 9

1.1 Notice for all FA-300 LED Series Built-In UDACTs Sold in Canada 9
1.2 Industry Canada Notice 9
1.3 Notice for all FA-300 LED Series Built-in UDACTs Sold in the U.S.A. 9

2.0 Introduction 11

2.1 Overall Features 11

3.0 Conventions 12

3.1 Circuits 12
3.2 Zone 12
3.3 Display Points 12
3.4 Wiring Styles 12

4.0 System Components 13

4.1 Main Fire Control Panel 13
4.2 Relay Module: Twelve Relays 14
4.3 Relay Modules: Six Relays 14
4.4 Polarity Reversal/City Tie 14
4.5 Smart Relay Module 14
4.6 Input Class A Converter: Six Circuits 15
4.7 Output Class A Converter: Four Circuits 15
4.8 Output Class A Converter: Two Circuits 15
4.9 Active End-of-Line Resistors 15
4.10 Remote Annunciators 16
4.11 Enclosures 16
4.12 Additional Fire Alarm System Accessories 17

5.0 Mechanical Installation 18

5.1 Installing the Enclosure 18
5.2 BBX-1024DS and BBX-1024DSR Mechanical Installation 20
5.3 Installing the Adder Modules 21

6.0 Cable and Jumper Connections for Main Board and Adder Modules 22

6.1 Main Fire Alarm Board 22
6.2 ICAC-306 Input Class A Converter Adder Module 23
6.3 OCAC-304/OCAC-302 Output Class A Converter Adder Module 24
6.4 Relay Adder Modules 24

6.5 PR-300 Polarity Reversal and City Tie Module 26
6.6 Annunciators 27
6.7 SRM-312R/SRM-312W Smart Relay Module 27
6.8 RTI-1 Remote Trouble Indicator 27

7.0 Field wiring 28

7.1 Main Fire Alarm Board Field Wiring 28
7.2 Relay Adder Module Wiring 32
7.3 Connecting to a 3G4010 Interface Device for Canada 33
7.4 Connecting to a 3G4010CF Interface Device outside Canada 34
7.5 Polarity Reversal and City Tie Module (PR-300) Wiring 35
7.6 Power supply connection 36
7.7 Wiring Tables and Information 37
7.8 Four-Wire Smoke Power 38
7.9 Supervised Auxiliary Power 38
7.10 Auxiliary Power 38

8.0 Turning on the Panel 39

8.1 Before Connecting the Power 39
8.2 Power-up procedure 39
8.3 Troubleshooting 41

9.0 Indicators, Controls and Operations 42

9.1 Common Indicators 43
9.2 Indicating Circuit Indicators 46
9.3 Signal Circuit Indicators 48
9.4 Common Controls 48
9.5 Circuit (Zone) Disconnect Buttons 50
9.6 Common Relays 51
9.7 Circuit Types 51
9.8 Indicating (Signal) Circuit Types 53
9.9 Evacuation codes (Signal Rates) 53
9.10 Single Stage Operation 54
9.11 Two-stage Operation 55

10.0 Supported Protocols/Devices 57

10.1 Synchronous Strobes 57
10.2 System Sensor’s i3 Devices 57

11.0 Configuration with the CFG-300 LCD Service Tool 60

11.1 Accessing Configuration Mode 62
11.2 Command Menu 63
11.3 FA-300 Config (Command-Menu) 64

11.4 Config Info (Command-Menu 75
11.5 Set Time (Command-Menu) 75
11.6 Change password (Command-Menu) 77
11.7 View Event Log (Command-Menu) 77
11.8 Clear Event Log (Command-Menu) 78
11.9 Walk Test (Command-Menu) 78
11.10 i3 Loop Test (Command-Menu) 80
11.11 Dialer Config (Command-Menu) 81
11.12 Test Dialer (Command-Menu) 89
11.13 Exit (Command-Menu) 90
11.14 CFG-300 LCD service tool operation 90
11.15 Zone messages 90
11.16 AC Power Fail 92
11.17 Battery trouble 92
11.18 Ground Fault 93
11.19 Remote Annunciator 93
11.20 Four-wire Smoke Detector Supply 93
11.21 Supervised Aux. Supply 94
11.22 City Tie Polarity reversal - PR-300/ Relay module 94

12.0 Appendix A: Compatible Receivers 96

13.0 Appendix B: Reporting 97

13.1 Ademco Contact-ID 97
13.2 Security Industries Association SIA-DCS 98

14.0 Appendix C: Specifications 99

15.0 Appendix D: Power Supply and Battery Calculations 102

16.0 Appendix E: Auxiliary Devices 103

17.0 Warranty and Warning Information 104

List of Figures

Figure 1 FA-301-12LDR 13
Figure 2 Box dimensions 18
Figure 3 Box dimensions, semi-flush mounting and trim ring 19
Figure 4 Flush trim detail (from above) 19
Figure 5 BBX-1024DS and BBX-1024DSR Installation Instructions and Dimensions 20
Figure 6 Installation of Adder Modules 21
Figure 7 Main Fire Alarm Board cable connector and jumper settings 22
Figure 8 ICAC-306 Input Class A Converter Adder Module 23
Figure 9 OCAC-304/OCAC-302 Output Class A Converter Adder Module 24
Figure 10 RM-312 twelve relay adder module 25
Figure 11 RM-312/RM-306 Relay programming 25
Figure 12 RM-306 six relay adder module 26
Figure 13 Polarity reversal and city tie module 26
Figure 14 Initiating circuit – Class B wiring 28
Figure 15 Initiating circuit– Class A wiring 29
Figure 16 Indicating circuit – Class B wiring 30
Figure 17 Indicating circuit –Class A wiring 30
Figure 18 Four-wire smoke detector - Class B wiring 31
Figure 19 Dialer wiring 31
Figure 20 Relay per zone (RM-312) Terminal connection 32
Figure 21 Relay per zone (RM-306) Terminal connection 32
Figure 22 Connecting an FACP to a 3G4010 Interface Device 33
Figure 23 Connecting an FACP to a 3G4010CF Interface Device outside Canada 34
Figure 24 Polarity reversal and city tie module terminal connection 35
Figure 25 Power supply connection 36
Figure 26 Battery connections 40
Figure 27 LED indicators and control buttons 42
Figure 28 Alarm Circuit Indicator 46
Figure 29 LAMP TEST 50
Figure 30 Evacuation and Alert Codes 54
Figure 31 Open Circuit Trouble 58
Figure 32 Communication Trouble 58
Figure 33 Dirty Device Trouble 58
Figure 34 Out of sensitivity Trouble 58
Figure 35 Freeze Trouble 59
Figure 36 FA-300 Configuration 62
Figure 37 Enter passcode 63
Figure 38 Command Menu 63
Figure 39 FA-300 Config menu 64
Figure 40 Feature Config menu 65
Figure 41 The event log 77
Figure 42 Select Log 78
Figure 43 Clear all the selected logs 78

Figure 44 Logs cleared 78
Figure 45 Walk test confirmation 78
Figure 46 Walk test zones 79
Figure 47 Walk test active 79
Figure 48 i3 loop test confirmation 80
Figure 49 i3 test zones 80
Figure 50 i3 test not ready 80
Figure 51 The selected zone is not i3 type 80
Figure 52 Dialer Config menu 81
Figure 53 Detection circuit zone message 91
Figure 54 Indicating circuit zone message 91
Figure 55 AC Power Fail 92
Figure 56 Battery Trouble 92
Figure 57 Ground Fault 93
Figure 58 Remote annunciator mismatch trouble 93
Figure 59 Four-wire Power Supply 94
Figure 60 Aux. Power Supply 94
Figure 61 City Tie module missing 95
Figure 62 City Tie trouble 95

List of Tables

Table 1 FA-300 LED Series Comparison Chart 13
Table 2 Power Supply Ratings 36
Table 3 Initiating Circuit Wiring 37
Table 4 Indicating Circuit Wiring 37
Table 5 RS-485 Wiring to Annunciators and other Devices 38
Table 6 Alarm Circuit Indicators 46
Table 7 Supervisory Circuit Indicators 46
Table 8 Property and Building Safety Indicators 47
Table 9 Trouble-only Circuit Indicators 48
Table 10 Signal Circuit Indicators 48
Table 11 i3 Smoke Detector LEDs 59
Table 12 Settings permitted in CAN/ULCS527 60
Table 13 Settings permitted in UL864 61
Table 14 Feature Config Menu 65
Table 15 i3 Detector Statuses 81
Table 16 Auto Test Time and Cellular Report Date 87
Table 17 FA-300 LED Series Specifications 99
Table 18 FA-300 LED System Modules and Annunciators 100

1.0 Industry Canada and FCC Notice

1.1 Notice for all FA-300 LED Series Built-In UDACTs Sold in Canada

Mircom's ***FA-300 LED Series BUILT-IN UDACT Communicator*** described in this manual is listed by Underwriters Laboratories Canada (ULC) for use in slave applications in conjunction with a Listed Fire Alarm Control Panel under Standard ULC-S527-11 (Standard for Control Units for Fire Alarm Systems) and CAN/ULC-S561-13 (Standard for Installation and Services for Fire Signal Receiving Centres and Systems). These Communicators should be installed in accordance with this manual; the Canadian / Provincial / Local Electrical Code; and/or the local Authority Having Jurisdiction (AHJ).

1.2 Industry Canada Notice

Repairs to certified equipment should be made by an authorized Canadian maintenance facility designated by the supplier. Any repairs or alteration made by the user to this equipment, or equipment malfunctions, may give the telecommunications company cause to request the user to disconnect the equipment. Users should ensure for their own protection that the **Earth Ground** connections of the power utility, telephone lines and internal metallic water pipe system, if present, are connected together. This is necessary both for proper operation and for protection.

Caution: **Users should not attempt to make such connections themselves, but should contact the appropriate electric inspection authority, or electrician, as appropriate.**

1.3 Notice for all FA-300 LED Series Built-in UDACTs Sold in the U.S.A.

Notes: The Ringer Equivalence Number (REN) assigned to each terminal device provides an indication of the maximum number of terminals allowed to be connected to a telephone interface. The termination on an interface may consist of any combination of devices subject only to the requirement that the sum of the Ringer Equivalence Numbers of all the devices does not exceed 5.

The REN for this product is part of the product identifier that has the format US:AAAEQ##TXXXX. The digits represented by ## are the REN without a decimal point (e.g., 03 is a REN of 0.3). For earlier products, the REN is separately shown on the label.

Mircom's ***FA-300 LED Series BUILT-IN UDACT Digital Communicator*** described in this manual is listed by Underwriters Laboratories Inc. (ULI) for use in slave applications in conjunction with a Listed Fire Alarm Control Panel under Standard 864 (Control Units and Accessories for Fire Alarm Systems). These Communicators comply with the National Fire Protection Association (NFPA) performance requirements for DACTs and should be installed in accordance with NFPA 72 Chapter 26 Supervising Station Fire Alarm Systems. These

Communicators should be installed in accordance with this manual; the National Electrical Code (NFPA 70); and/or the local Authority Having Jurisdiction (AHJ).

1.3.1 FCC Notice

This equipment complies with Part 68 of the FCC rules and the requirements adopted by the ACTA. On the telco transformer of this equipment is a label that contains, among other information, a product identifier in the format US:AAAEQ##TXXXX. If requested, this number must be provided to the telephone company. This equipment is capable of seizing the line. This capability is provided in the hardware.

Type of Service: The **Communicator** is designed to be used on standard device telephone lines. It connects to the telephone line by means of a standard jack called the USOC RJ-11C (or USOC FJ45S). Connection to telephone company provided coin service (central office implemented systems) is prohibited. Connection to party lines service is subject to state tariffs.

Telephone Company Procedures: The goal of the telephone company is to provide you with the best service it can. In order to do this, it may occasionally be necessary for them to make changes in their equipment, operations or procedures. If these changes might affect your service or the operation of your equipment, the telephone company will give you notice, in writing, to allow you to make any changes necessary to maintain uninterrupted service.

In certain circumstances, it may be necessary for the telephone company to request information from you concerning the equipment which you have connected to your telephone line. Upon request of the telephone company, provide the FCC registration number and the ringer equivalence number (REN); both of these items are listed on the equipment label. The sum of all of the REN's on your telephone lines should be less than five in order to assure proper service from the telephone company. In some cases, a sum of five may not be usable on a given line.

If Problems Arise: If any of your telephone equipment is not operating properly, you should immediately remove it from your telephone line, as it may cause harm to the telephone network. If the telephone company notes a problem, they may temporarily discontinue service. When practical, they will notify you in advance of this disconnection. If advance notice is not feasible, you will be notified as soon as possible. When you are notified, you will be given the opportunity to correct the problem and informed of your right to file a complaint with the FCC. Contact your telephone company if you have any questions about your phone line. In the event repairs are ever needed on the Communicator, they should be performed by Mircom Technologies Ltd. or an authorized representative of Mircom Technologies Ltd. For information contact Mircom Technologies Ltd. at the address and phone numbers shown on the back page of this document.

2.0 Introduction

Mircom's FA-300 LED Series Fire Alarm Control Panel is a Digital Signal Processor (DSP)-based fire panel. The FA-300 provides a maximum of 12 supervised Class B or A Initiating circuits, and maximum four supervised Class B or A indicating circuits. All circuits are supervised for opens and ground faults, and indicating circuits are supervised for shorts. Optional modules include Relay, Polarity Reversal and City Tie and Class A Converters for initiating and indicating circuits. Semi-flush or surface mountable enclosures can be used for retrofits and on new installations.

Note: Installation of the FA-300 LED Series fire alarm control panel should be in accordance with Canadian Electrical Code Part 1, ULC-S524 installation of Fire Alarm System, National Electrical Code NFPA 70 and NFPA 72. Final acceptance subject to the Local Authority Having Jurisdiction (AHJ).

2.1 Overall Features

- Basic unit has 12 Class B initiating circuits, which may be configured as Class A using input Class A converter adder modules. Each initiating circuit can be configured as Alarm, Verified Alarm, Water flow Alarm, Sprinkler Alarm, Latching or Non-Latching Supervisory, Property and Building Safety, or Trouble-Only circuits. There are two LEDs per circuit, one for Trouble (amber), and one dual color (amber/red) LED for Supervisory (amber) and Alarm (red).
- Basic unit has four Power Limited Class B indicating circuits with individual trouble indicators. Each indicating circuit may be configured as Class A using output Class A converter adder module. Each indicating circuit may be configured as Silenceable signal, non Silenceable signal, Silenceable strobe, non Silenceable strobe. The audible signal may be Steady, Temporal Code, California Code, or March Time.
- Two Stage operation available.
- A pushbutton associated with each initiating and indicating circuit can individually disconnect the circuit.
- Configurable Signal Silence Inhibit, Auto Signal Silence, Two-Stage Operation, and One-Man Walk Test.
- Subsequent Alarm, Supervisory, and Trouble operation.
- Four-wire resettable smoke power supply 300 mA maximum class B with EOL relay.
- Relay Contacts for Common Alarm, Common Supervisory and Common Trouble all non-disconnectable and Auxiliary Alarm Relay (disconnectable).
- RS-485 Interface for LCD Annunciators, RA-1000 Series Remote Multiplex Annunciators and Smart relay adder.
- Optional Modules for additional Relay Circuits, City Tie and Polarity Reversal Signaling.
- Extensive transient protection.
- With or without built-in UDACT (Digital Alarm Communicator Transmitter).
- Easy configuration of the panel and built-in UDACT using LCD service tool (CFG-300).
- Remote dial up (with built-in UDACT version) for event log checking and/or configuration changing.
- Laptop programmer for direct configuration changing and log checking.

3.0 Conventions

3.1 Circuits

Refers to an actual electrical interface for Initiating (Detection) and Indicating (Signal or NAC) or Relays.

3.2 Zone

Is a logical concept for a Fire Alarm Protected Area, and consists of at least one **circuit**.

Often the terms **zone** and **circuit** are used interchangeably, but in this manual **circuit** refers only to a physical electrical loop.

3.3 Display Points

There is a display point associated with every initiating and indicating circuit of the FA-300 LED Series fire panel. For an initiating circuit there are 2 LEDs for every display point: one single color (amber) and one dual color (red/amber). For an indicating circuit there is only one LED: one single color (amber), for every display point.

3.4 Wiring Styles

Initiating and indicating circuits are Class B (formerly style B and Y).

Changing the initiating circuits to Class A requires an ICAC-306 adder board which converts six initiating zones from Class B circuits to Class A. This is done without decreasing the number of circuits, which remains the same as in Class B.

Changing the indicating circuits to Class A requires an OCAC-304 adder board which converts four indicating zones from Class B circuits to Class A or an OCAC-302 adder board which converts two indicating zones from Class B circuits to Class A.

4.0 System Components

4.1 Main Fire Control Panel

Figure 1 FA-301-12LDR

All FA-300 LED Series Panels have the following features:

- LED Display.
- Four Power Limited Class B Indicating circuits (up to1.70 amperes each, 5 amperes total)
- Two six zone **ICAC-306 Input Class A Converter** adder modules may be used for Class A wiring of Initiating circuits.
- One **OCAC-304 Output Class A Converter** adder module may be used for Class A wiring of the Indicating circuits.
- Contain Common Alarm, Common Supervisory & Common Trouble Relays, Auxiliary Alarm Relay (disconnectable), an RS-485 Interface for Remote Annunciators, a Resettable Four Wire Smoke Detector Power Supply, and a non-resettable auxiliary supply.
- Used with Mircom BAT-12V12A (12 Amp-hour) batteries (two required).

Table 1 FA-300 LED Series Comparison Chart

Model	# of zones	# of initiating circuits	On board Dialer	Door Color
FA-301-12LDW	12	12	yes	white
FA-301-12LDR	12	12	yes	red
FA-301-12LW	12	12	no	white
FA-301-12LR	12	12	no	red
FA-301-8LDW	8	8	yes	white
FA-301-8LW	8	8	no	white
FA-301-8LDR	8	8	yes	red
FA-301-8LR	8	8	no	red

4.2 Relay Module: Twelve Relays

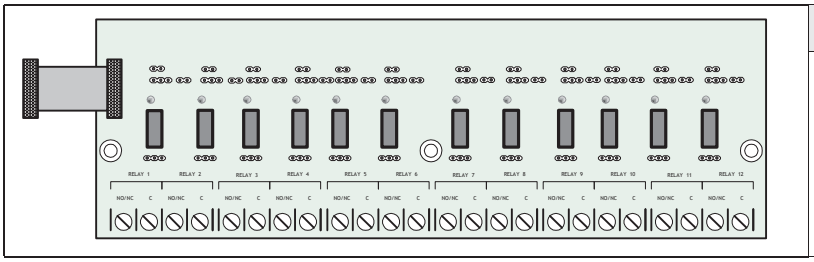

Model	Description
RM-312	Twelve relay adder module

4.3 Relay Modules: Six Relays

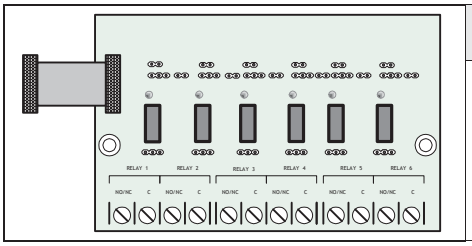

Model	Description
RM-306	Six relay adder module

4.4 Polarity Reversal/City Tie

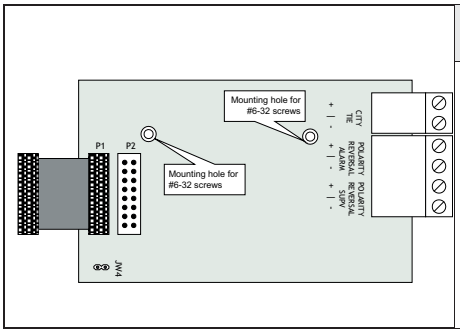

Model	Description
PR-300	Polarity Reversal and/or City Tie Module

4.5 Smart Relay Module

Model	Description
SRM-312W	Smart Relay Module (12 relays) with white enclosure
SRM-312R	Smart Relay Module (12 relays) with red enclosure

4.6 Input Class A Converter: Six Circuits

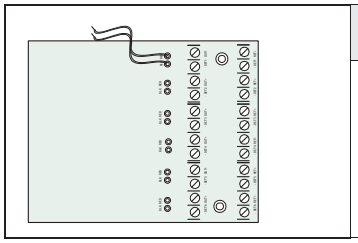

Model	Description
ICAC-306	Input Class A converter Module (six circuits). This module has built in Active End-of-Line resistors.

4.7 Output Class A Converter: Four Circuits

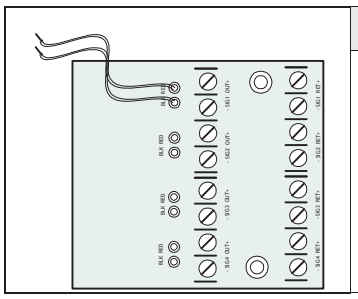

Model	Description
OCAC-304	Output Class A converter module (four circuits)

4.8 Output Class A Converter: Two Circuits

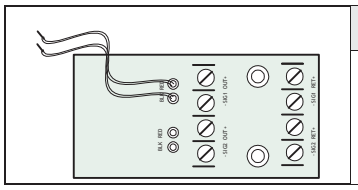

Model	Description
OCAC-302	Output Class A converter module (two circuits)

4.9 Active End-of-Line Resistors

The ELRX-300 are power-saving End-of-Line resistors that eliminate the need for an additional battery cabinet or larger batteries in order to meet the 60 hour standby requirement.

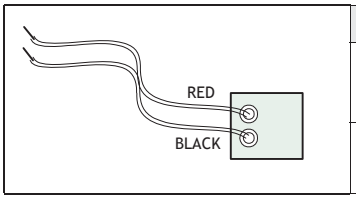

Model	Description
ELRX-300	Active end-of-line resistor without plate
ELRX-300R	Active end-of-line resistor with end-of-line red plate

4.10 Remote Annunciators

	Model	Description
	RAM-300LCDW	Remote Annunciator module, LCD display, white painted box
	RAM-300LCDR	Remote Annunciator Module, LCD display, red painted box
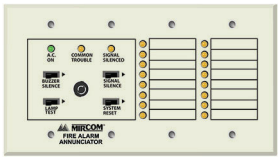	**RAM-216**	16 Zone remote annunciator, white enclosure
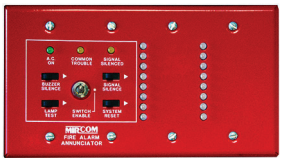	**RAM-216R**	16 Zone remote annunciator, red enclosure
	RAM-208	8 Zone remote annunciator, white enclosure
	RAM-208R	8 Zone remote annunciator, red enclosure
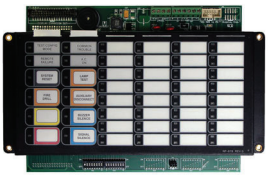	**RAM-1032TZDS** **RAM-1032TZDS-CC**	Model RAM-1032TZDS Main Chassis Remote Annunciator with 16 Bi-colored LEDs and 32 trouble LEDs. Model RAM-1032TZDS-CC is the same as the RAM-1032TZDS, except it has conformal coating and is to be used in a BB-1001WPA/BB-1001WPRA weather protected box.

4.11 Enclosures

	BB-1001D	White Enclosure for one annunciator.
	BB-1001DR	Red Enclosure for one annunciator.
	BB-1001DB	Black Enclosure for one annunciator.
	BB-1001DS	Enclosure for one annunciator with stainless steel door.
	BB-1001WPA	White enclosure for one annunciator rated for outdoor environment, wet location.
	BB-1001WPRA	Red enclosure for one annunciator rated for outdoor environment, wet location.

4.12 Additional Fire Alarm System Accessories

RTI-1	Remote Trouble Indicator	ULC and ULI Approved
MP-300	End-of-line resistor plate, 3.9K ohm	ULC and ULI Approved
MP-300R	End-of-line resistor plate, red	ULC Approved
BC-160	External Battery Cabinet	ULC and ULI Approved
RAM-1016TZDS	Remote Annunciator with 16 bicolored LEDs (DS model has 16 bi-colored LEDs and 16 trouble LEDs)	ULC and ULI Approved
PCS-100	Passive Communications Interface Board	ULC Approved
UDACT-300A	Universal Communicator	ULC and ULI Approved
BK-RAM	Deadfront bracket (ULC requirement for RAM-1016 series and RAM-1032TZDS series)	ULC Approved

5.0 Mechanical Installation

5.1 Installing the Enclosure

Install the FA-300 LED Series Fire Alarm Panel enclosure as shown below. Mount enclosure surface mount using the four mounting holes, as shown and the screws provided.

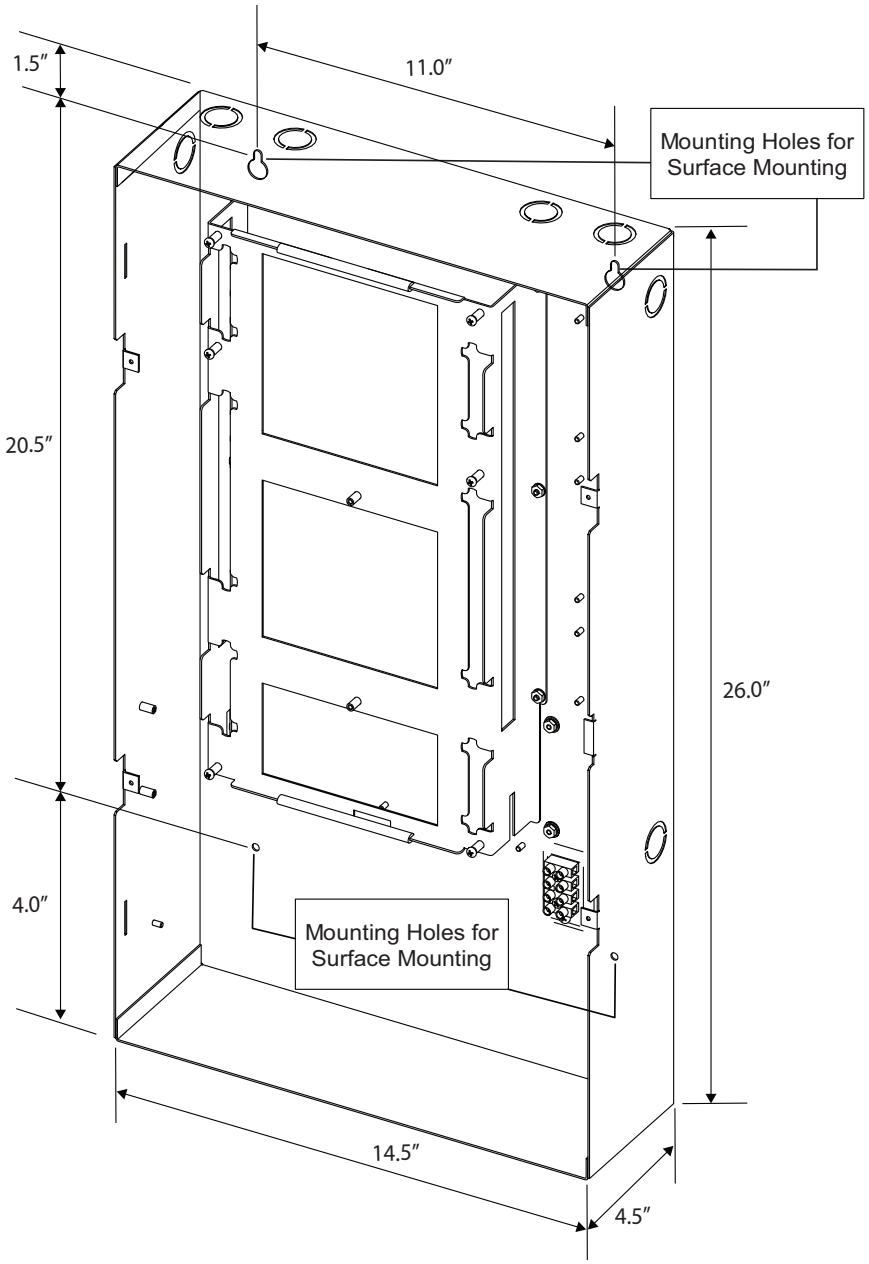

Figure 2 Box dimensions

The backbox may be semi-flush mounted using the trim ring model FA-UNIV-TRB (BLACK), see Figure 3. Remove the door (also disconnect the ground strap), the dead front and semi-

flush mount the backbox into the wall. Peel the adhesive cover from the trim ring and stick to the wall surface around the backbox, after wall is finished.

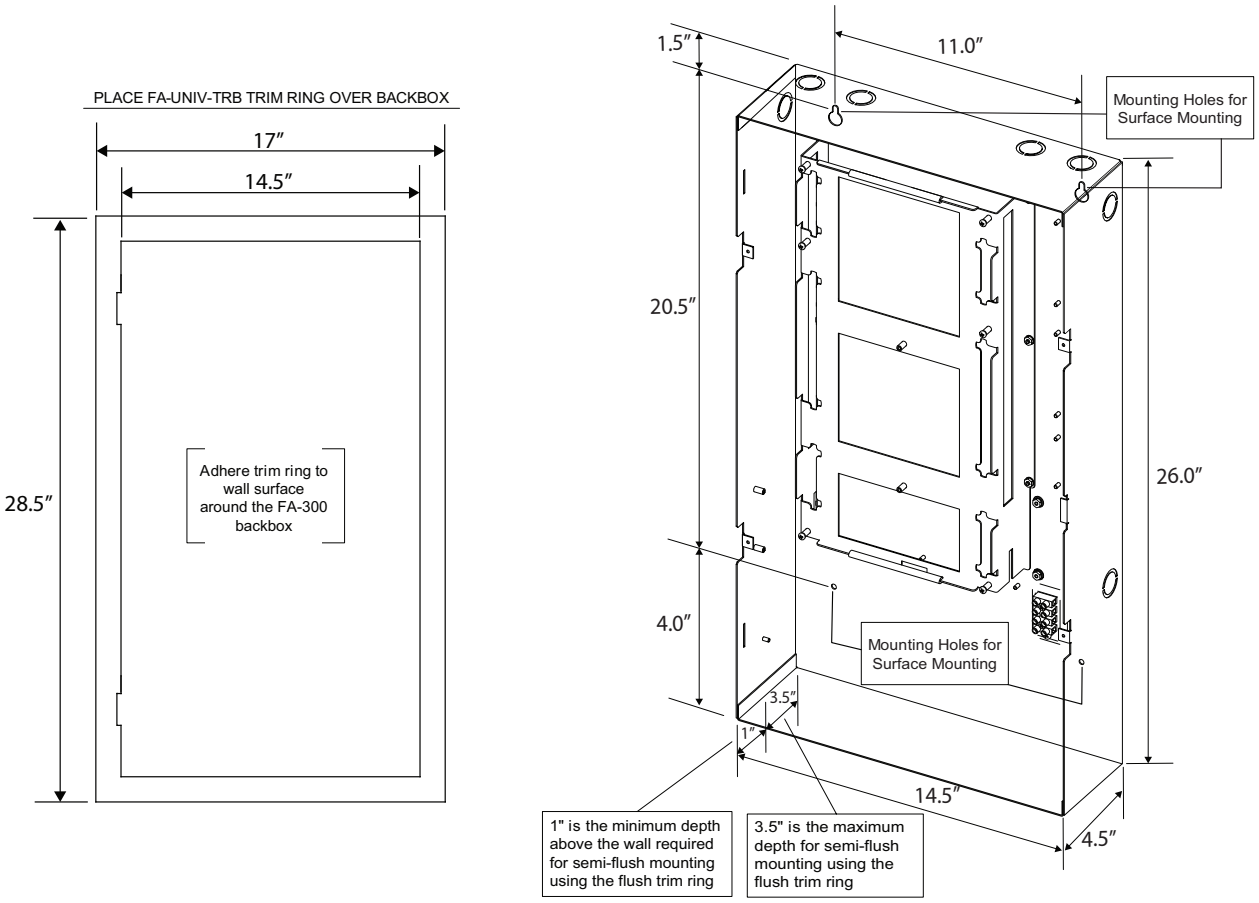

Figure 3 Box dimensions, semi-flush mounting and trim ring

Figure 4 shows a cross-section of the semi-flush mounted enclosure and the trim ring. Make sure to **allow a minimum depth of 1” above the wall surface** for proper door opening.

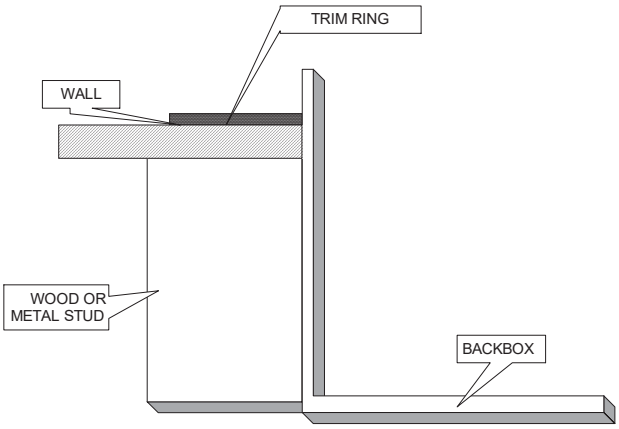

Figure 4 Flush trim detail (from above)

5.2 BBX-1024DS and BBX-1024DSR Mechanical Installation

The BBX-1024DS and BBX-1024DSR are suitable for flush or surface mounting, and have a built-in trim ring.

Dimensions of Enclosure (minus built in trim ring)	14.5” x 4.2” x 26”
Distance between horizontal mounting screws	12”
Distance between vertical mounting screws	23.5”
Complete Dimensions of Enclosures	16.3” x 5.5” x 27.5”

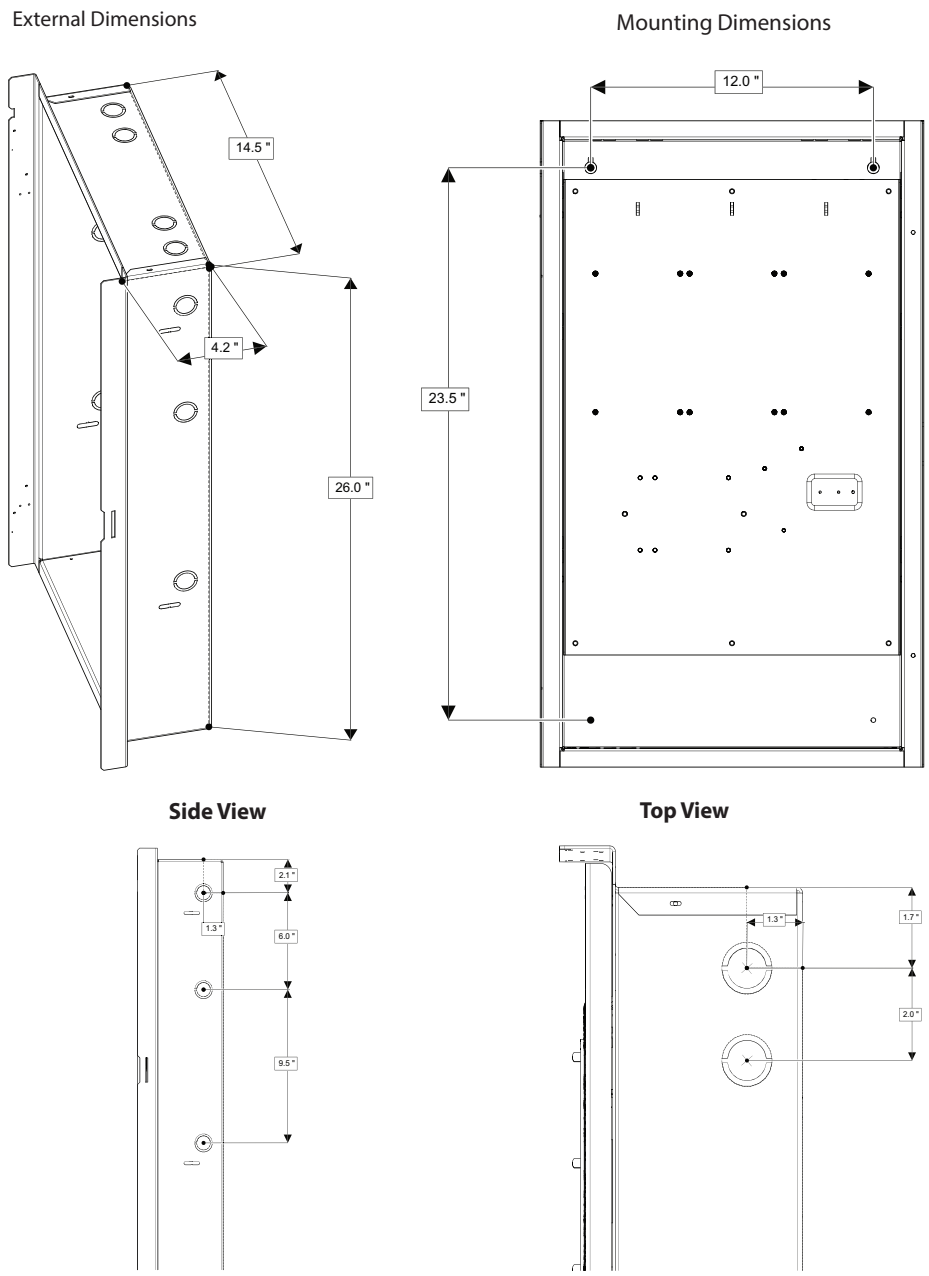

Figure 5 BBX-1024DS and BBX-1024DSR Installation Instructions and Dimensions

5.3 Installing the Adder Modules

FA-300 LED Series Fire Alarm panels come pre-assembled with all components and boards except for Adder Modules. Module installation locations are shown in Figure 6. Refer to Figure 7 on the next page for jumper and DIP switch settings and see section on page 37 for wiring specifications.

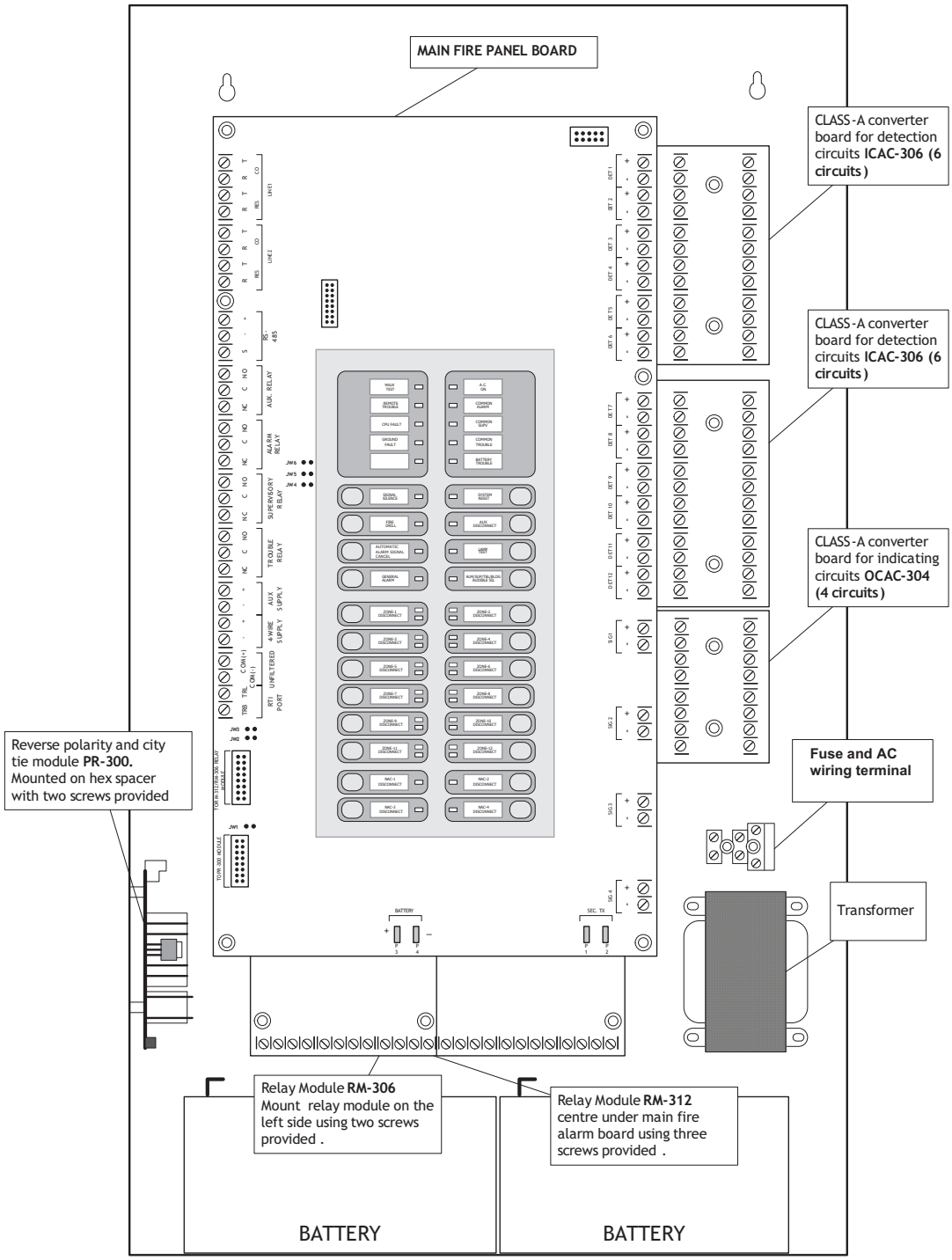

Figure 6 Installation of Adder Modules

6.0 Cable and Jumper Connections for Main Board and Adder Modules

6.1 Main Fire Alarm Board

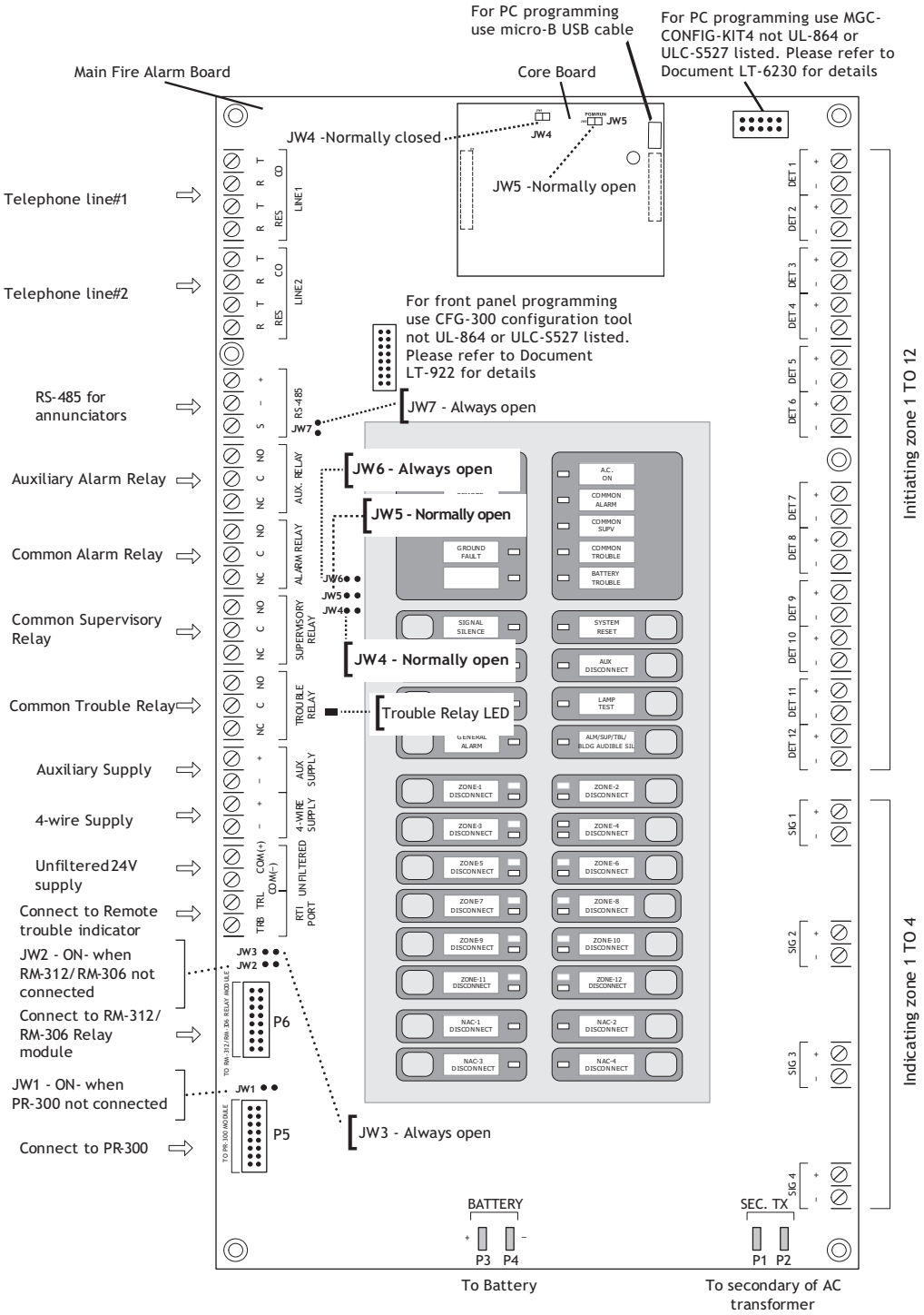

Figure 7 Main Fire Alarm Board cable connector and jumper settings

6.1.1 Connectors and Jumpers on the Main Fire Alarm Board

P5	Cable from **P1** of the **PR-300 Polarity Reversal and City Tie Module** connects here. Otherwise not used.
P6	Cable from connector **P1** of the **RM-312 or RM-306 Relay Adder Module** connects here. Otherwise not used.
JW1	On the Main Fire Alarm Module, this jumper must be removed if a **PR-300 Polarity Reversal and City Tie Module** is installed.
JW2	Remove this jumper if an **RM-312 or RM-306 Relay Adder Module** is used.
JW3	Always open.
JW4	Normally open. Place jumper here and power down (AC and Batteries) then power back to revert back to default password. Once the system has reset, **REMOVE** the jumper from the pins at JW4. Leave normally open.
JW5	Normally open to BLOCK remote configuration via modem, PC with a UIMA converter module or a CFG-300 Configuration Tool. Place jumper here to ALLOW any type of configuration.
JW6	Not used, open.
JW7	Not used, open.

6.1.2 Jumpers on the Core Board

JW4	Leave closed (on).
JW5	Leave open (off).

6.2 ICAC-306 Input Class A Converter Adder Module

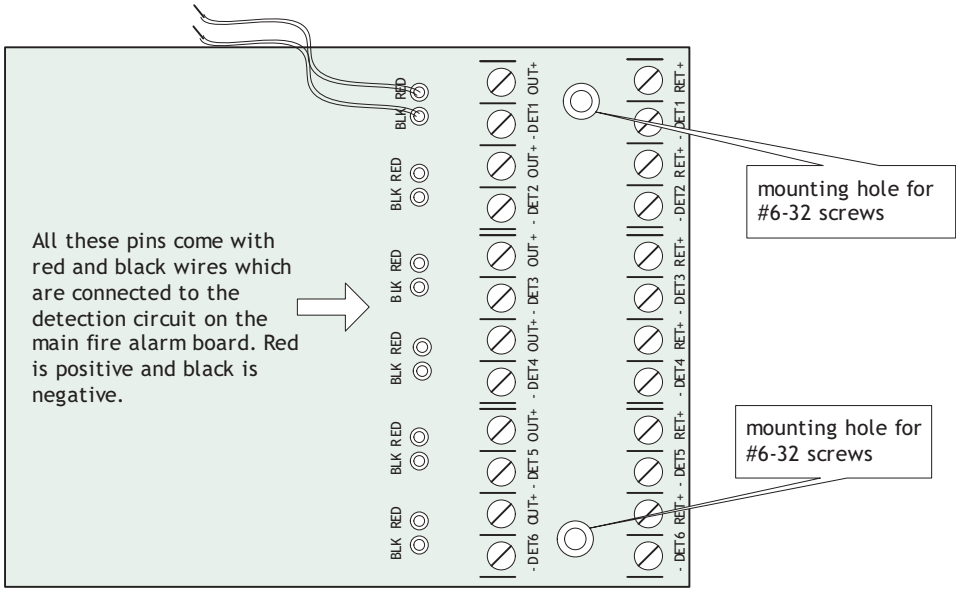

Figure 8 ICAC-306 Input Class A Converter Adder Module

There are no jumpers or cables to set on this module, just wiring from the converter (wires are fixed here) to the Main Fire Alarm Board.

Initiating circuits must be wired from the ICAC-306 module to the Main Fire Alarm board. For example, Initiating circuit 1 positive (red) and negative (black) wires are connected to the positive and negative terminals (respectively) of Initiating circuit 1 on the Main Fire Alarm Board. From the ICAC-306 converter Initiating circuits are wired out to the devices from the positive and negative terminals marked DET OUT and the circuit return wires are brought back to the converter module to positive and negative terminals marked DET RET.

To convert all 12 initiating circuits of the Fire Alarm Panel, two of these ICAC-306 Input Class A Converter Adder Modules are required.

6.3 OCAC-304/OCAC-302 Output Class A Converter Adder Module

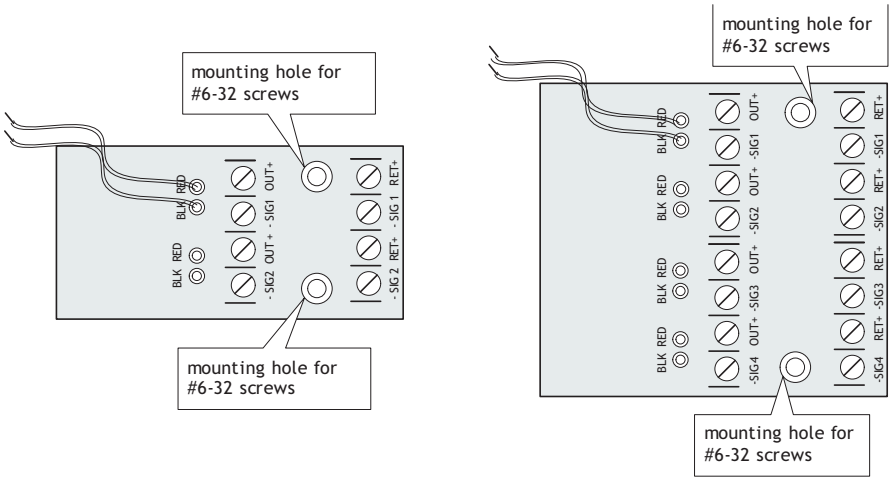

Figure 9 OCAC-304/OCAC-302 Output Class A Converter Adder Module

Indicating circuits must be wired from the OCAC-304/OCAC-302 to the main Fire Alarm board. For example indicating circuit 1 positive (red wire) and negative (black wire) is wired from the Class A converter module to the positive and negative terminals of Indicating circuit 1 on the Main Fire Alarm board.

The actual indicating zone is wired from the SIGNAL OUT positive and negative to the signaling devices and then wired back to the SIGNAL RET positive and negative.

6.4 Relay Adder Modules

6.4.1 RM-312 Twelve-Relay Adder Module

The ribbon cable from P1 of the RM-312 is connected to P6 on the Main Fire Alarm Board. The jumpers located above each relay on the RM-312 are used to configure the relays. The

jumpers located below the relays are used to select either normally open contacts or normally closed contacts.

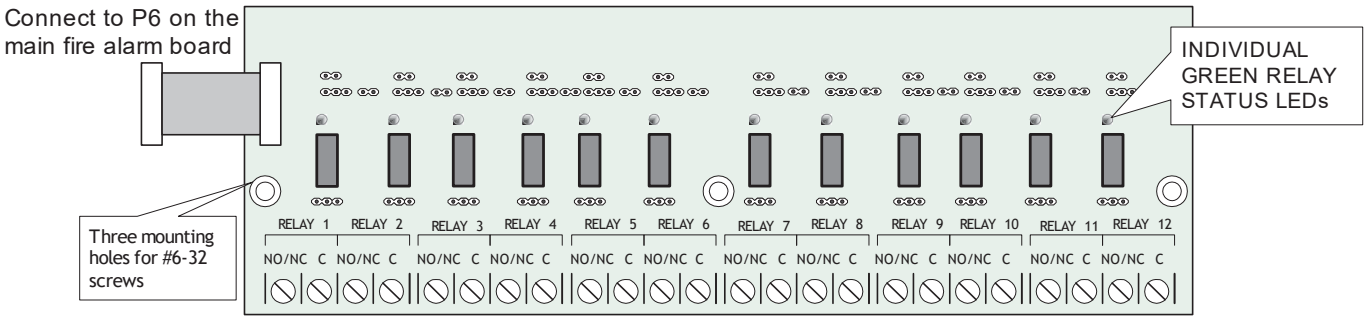

Figure 10 RM-312 twelve relay adder module

P1	Cable from RM-312 Relay Adder Module connects to P6 on Main Fire Alarm Board.

6.4.2 Programming the relays

A typical relay circuit is shown in Figure 11 with the jumper locations and descriptions.

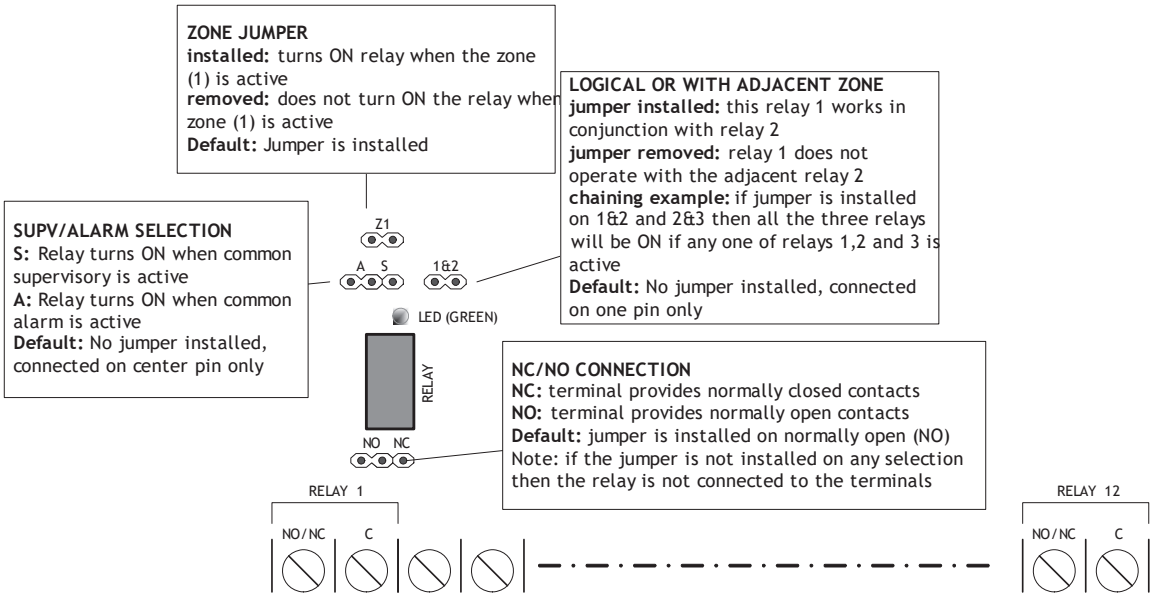

Figure 11 RM-312/RM-306 Relay programming

Note: Relay programming should be done before installing the board.

6.4.3 RM-306 Six Relay Adder Module

Cable from P1 of the RM-306 is connected to P6 on the Main Fire Alarm Board. The jumpers located above each relay on the RM-306 are used to configure the relays. The jumpers

located below the relays are used to select either normally open contacts or normally closed contacts.

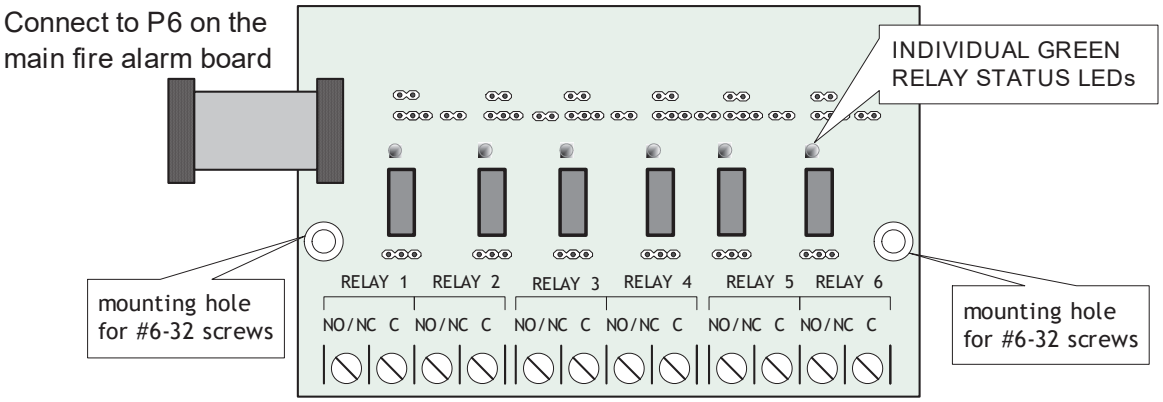

Figure 12 RM-306 six relay adder module

P1	Cable from RM-306 Relay Adder Module connects to P6 on Main Fire Alarm Board.

6.4.4 Programming the relays

See explanation in Figure 11.

Note: Relay programming should be done before installing the board.

6.5 PR-300 Polarity Reversal and City Tie Module

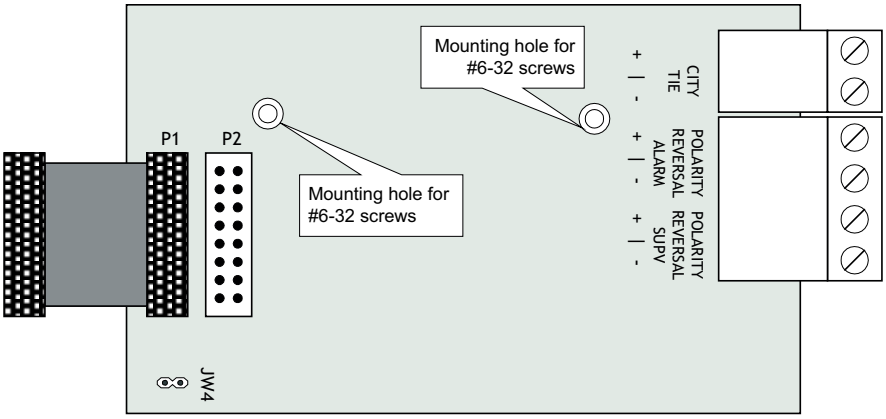

Figure 13 Polarity reversal and city tie module

The following hardware configuration must be performed before installing the PR-300.

6.5.1 PR-300 jumper settings

P1	Cable connects to **P5** on the **Main Board**
P2 & JW4	Not used. Jumper JW4 remains on board.

The Alarm Transmit signal to the PR-300 can be programmed to turn OFF when signal silence is active. This allows the City Tie Box to be manually reset. On subsequent alarms the silenceable signals resound and the City Tie Box is retriggered.

The Trouble Transmit signal to the PR-300 can be programmed to delay AC power fail for 0 to 3 hours if this is the only system trouble.

6.6 Annunciators

Connect the annunciators to the RS-485 terminals and to auxiliary power. Use class B wiring for RS-485. For instructions, see the following Mircom documents:

- RAM-208/RAM-208R: LT-648
- RAM-216/RAM-216R: LT-658
- RAM-300LCDR/RAM-300LCDW: LT-1002
- RAM-1032TZDS(-CC): LT-617

6.7 SRM-312R/SRM-312W Smart Relay Module

Connect SRM-312R/SRM-312W to the RS-485 terminals and to auxiliary power. Use class B wiring for RS-485. For instructions, see LT-1001.

6.8 RTI-1 Remote Trouble Indicator

Connect the RTI-1 to the port labeled **RTI-1**. For instructions, see LT-388.

7.0 Field wiring

7.1 Main Fire Alarm Board Field Wiring

Wire devices to the terminals as shown in the figures that follow. Refer to the Wiring Tables for wire gauges and to *Appendix A* for specifications.

Caution: Do not exceed power supply ratings.

7.1.1 Initiating Circuit Wiring Class B

Wiring diagrams for the initiating circuits are shown below. The panel supports Class B and Class A for the initiating circuits. The initiating circuits are supervised by a 3.9K End-of-Line Resistor or for power saving an Active-End-of-Line.

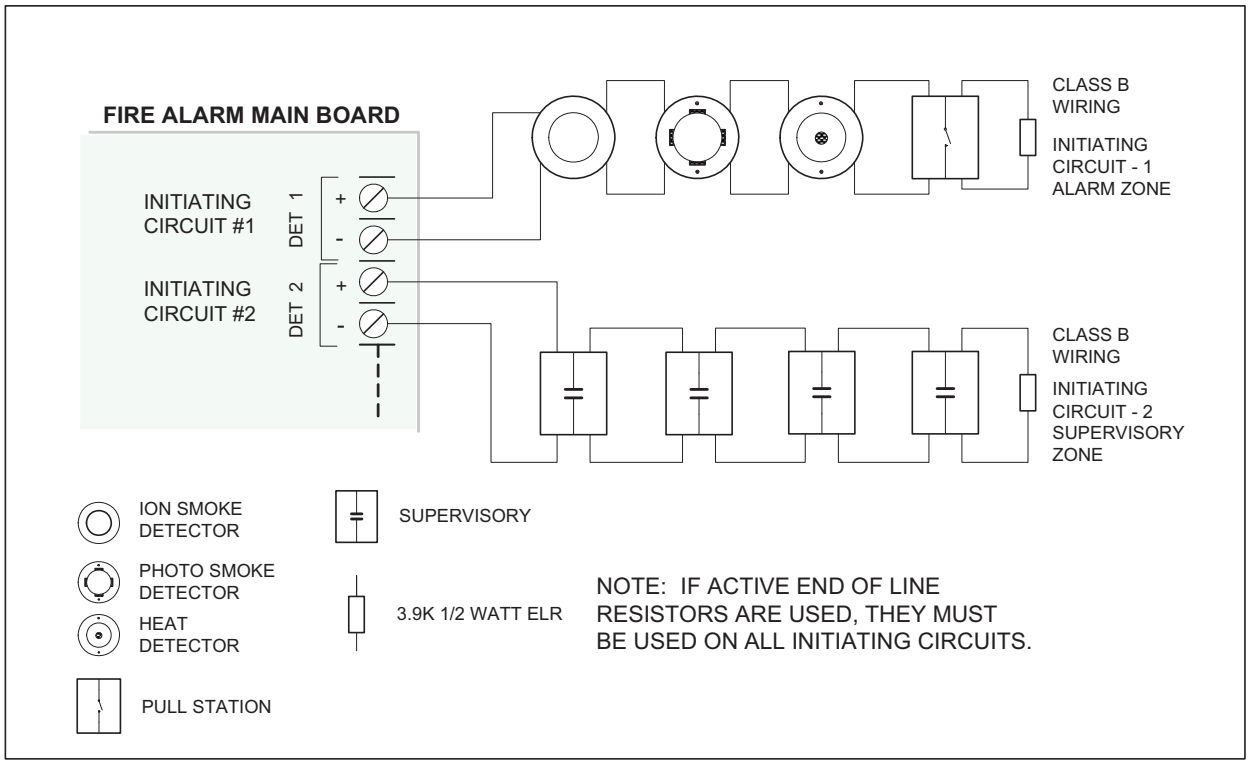

Figure 14 Initiating circuit – Class B wiring

Note: Depending on configuration, End-of-Line Resistors on initiating circuits must be all 3.9 kΩ resistors or all Active End-of-Line resistors.

7.1.2 Initiating Circuit Wiring Class A

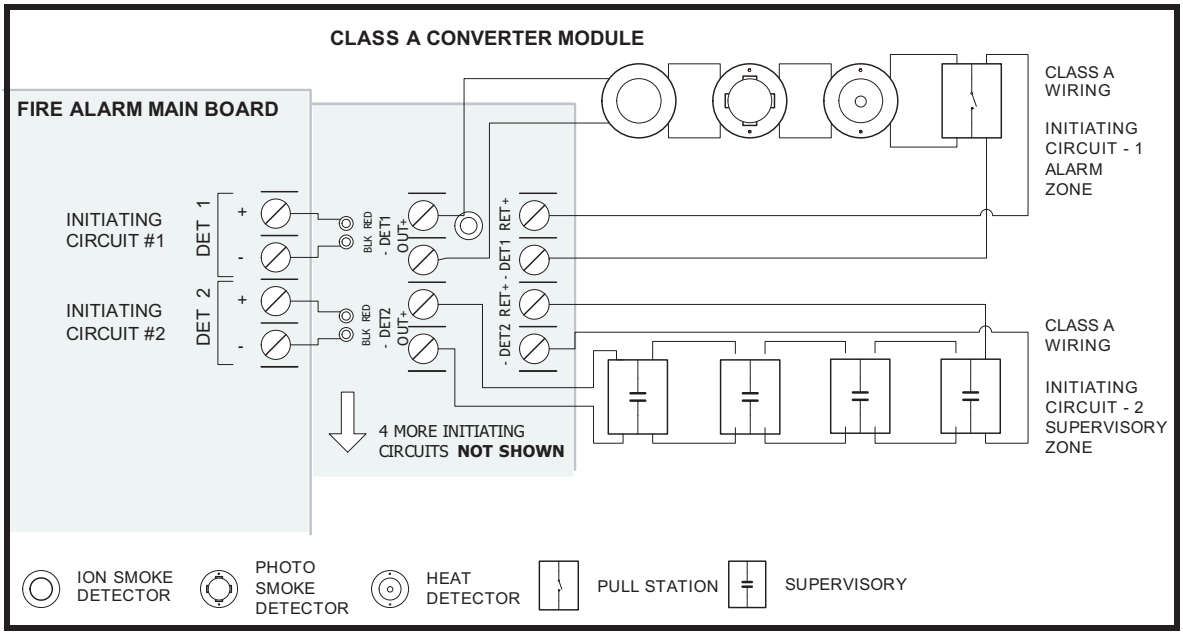

Figure 15 Initiating circuit– Class A wiring

7.1.3 Indicating Circuit Wiring

The FA-300 LED Series Fire Alarm supports Class B and Class A wiring for its indicating circuits. Each circuit is supervised by a 3.9K End-of-Line resistor. Each indicating circuit provides up to 1.7 A, 5 A maximum total if no auxiliaries are used.

Note: An Active End-of-Line resistor CANNOT be used with any indicating circuits. Always use 3.9 kΩ end of Line resistors for indicating circuits.

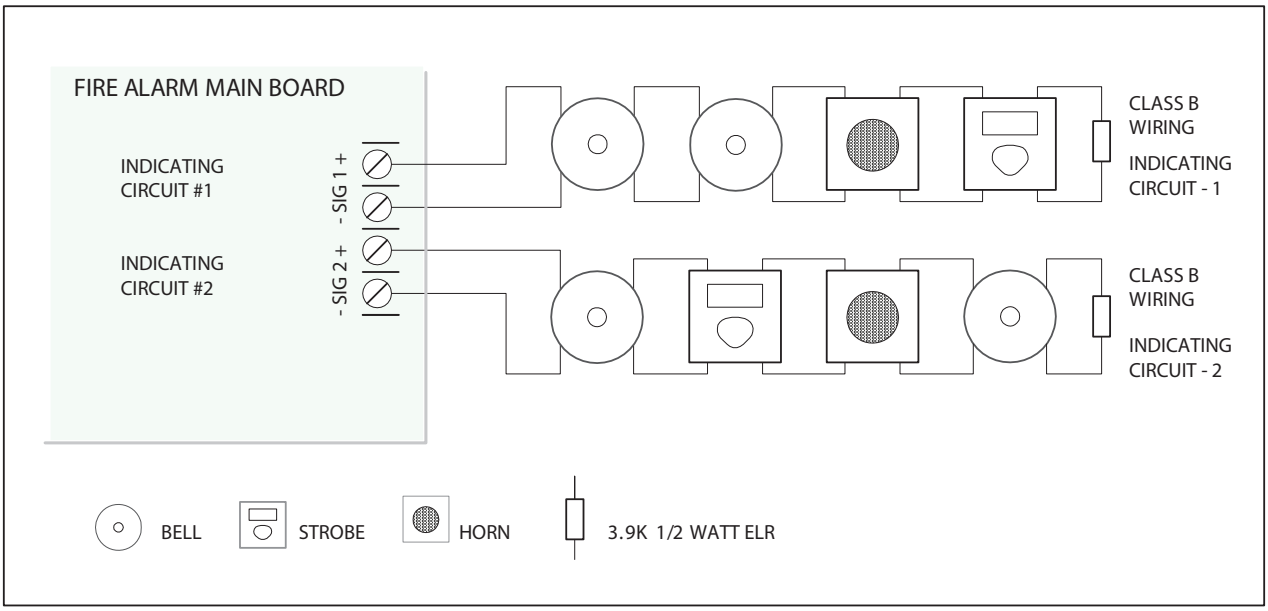

Figure 16 Indicating circuit – Class B wiring

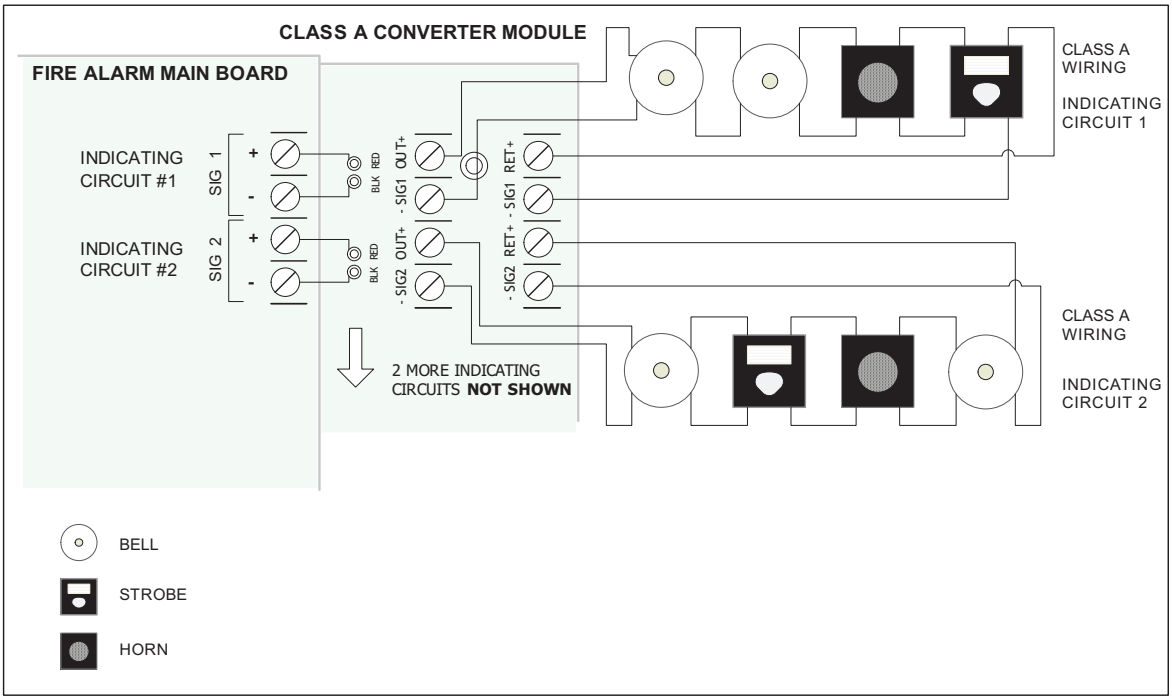

Figure 17 Indicating circuit –Class A wiring

7.1.4 Four Wire Smoke Detector Wiring

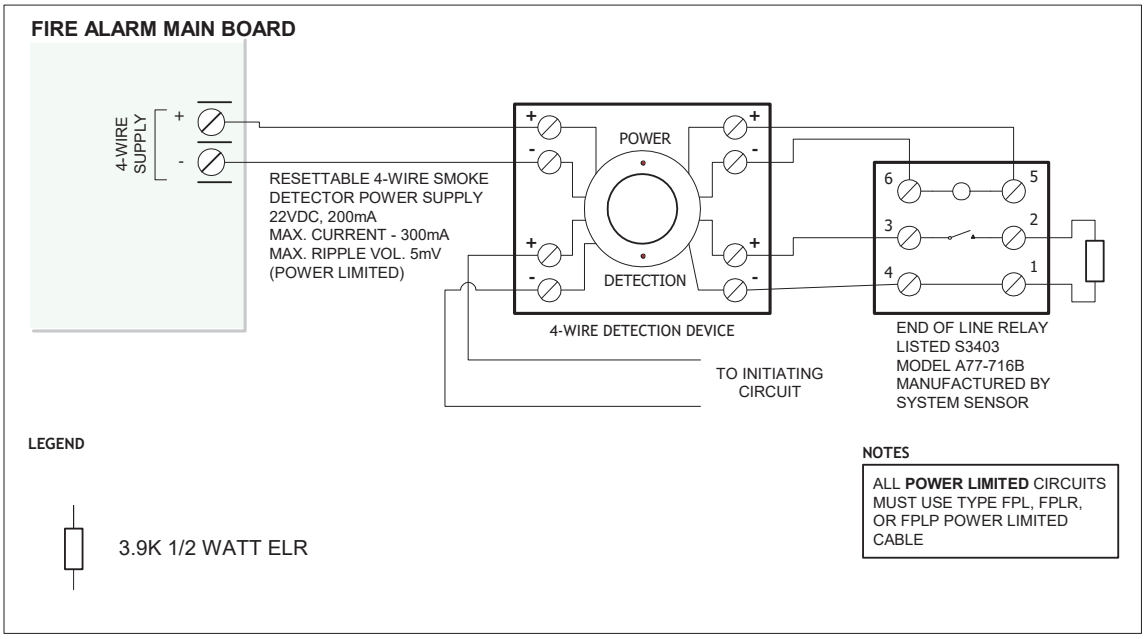

Figure 18 Four-wire smoke detector - Class B wiring

7.1.5 Dialer Wiring

If you have Fire Alarm Panel Models FA-301-12LDW, FA-301-12LDR, FA-301-8LDW and FA-301-8LDR there is a dialer on board and terminals marked Line 1 and Line 2 must be wired as shown in Figure 19 below. To comply with UL 864 10th edition, see section 7.3 on page 33 for Canada and section 7.4 on page 34 for outside Canada.

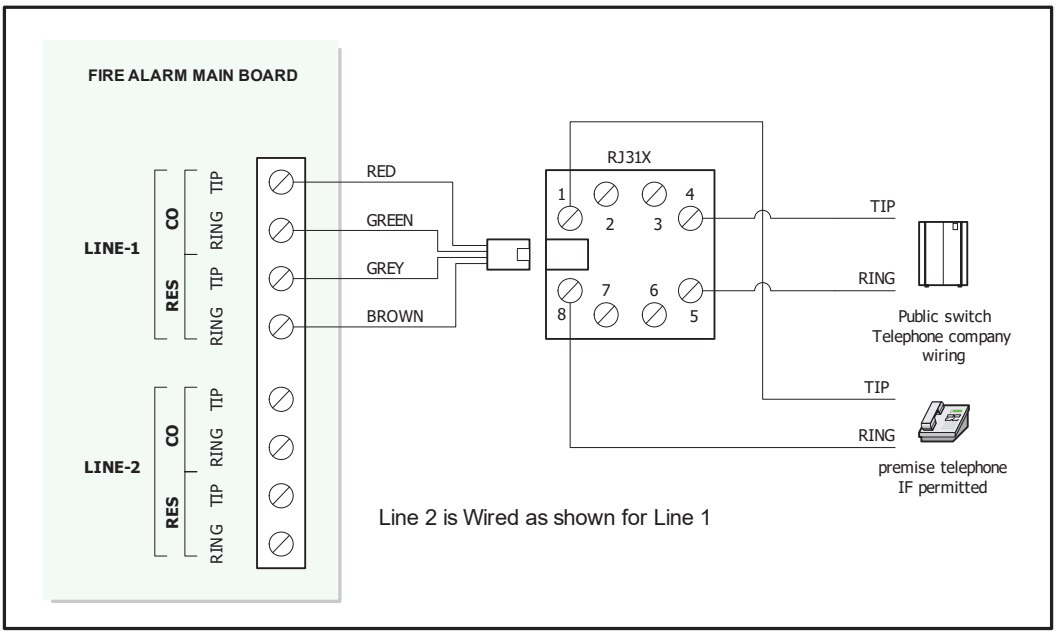

Figure 19 Dialer wiring

7.2 Relay Adder Module Wiring

Wire relays on the relay adder modules RM-312 and RM-306 as shown in Figures 19 and 20.

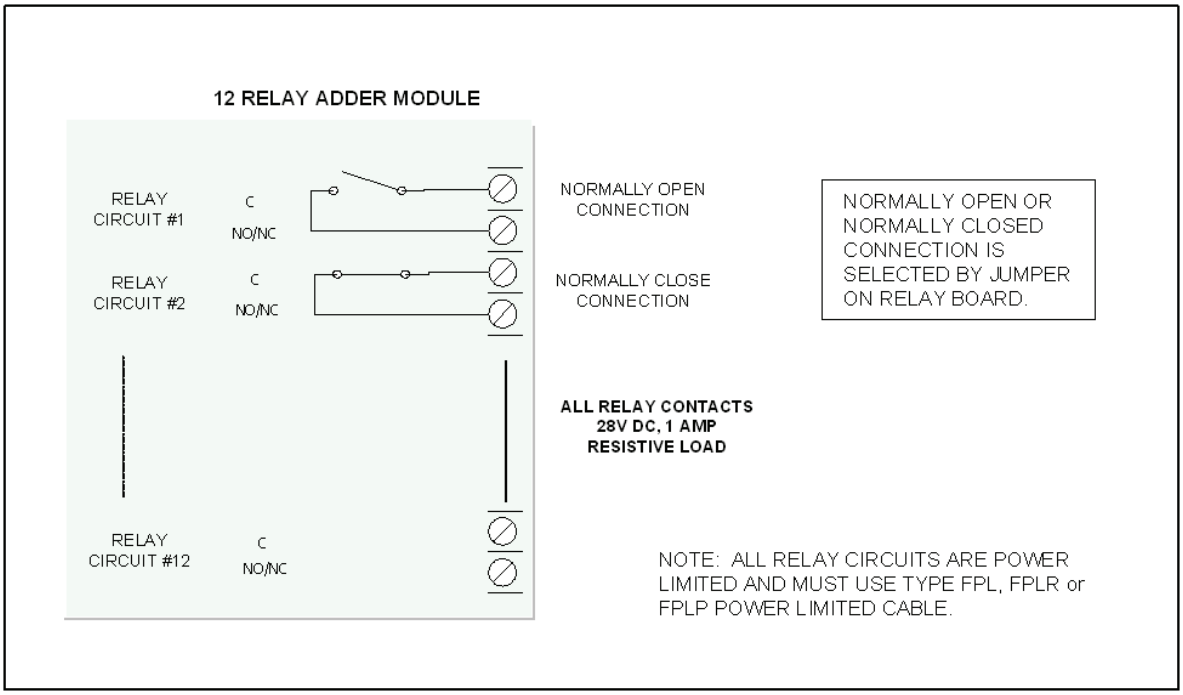

Figure 20 Relay per zone (RM-312) Terminal connection

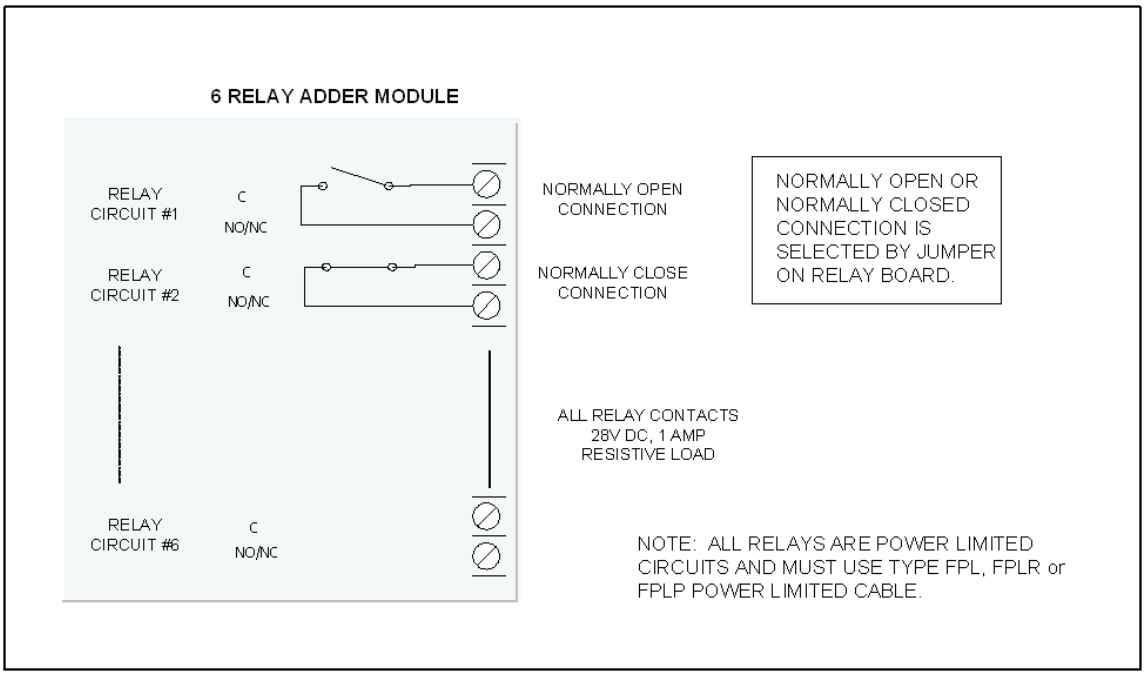

Figure 21 Relay per zone (RM-306) Terminal connection

7.3 Connecting to a 3G4010 Interface Device for Canada

A typical connection is shown in Figure 22. The PCS-100 Passive Communications Interface Board (sold separately) is required.

For information on Compatible DACR Receivers see Appendix A: Compatible Receivers.

FA-301 - 3G4010 Connection - Typical Diagram

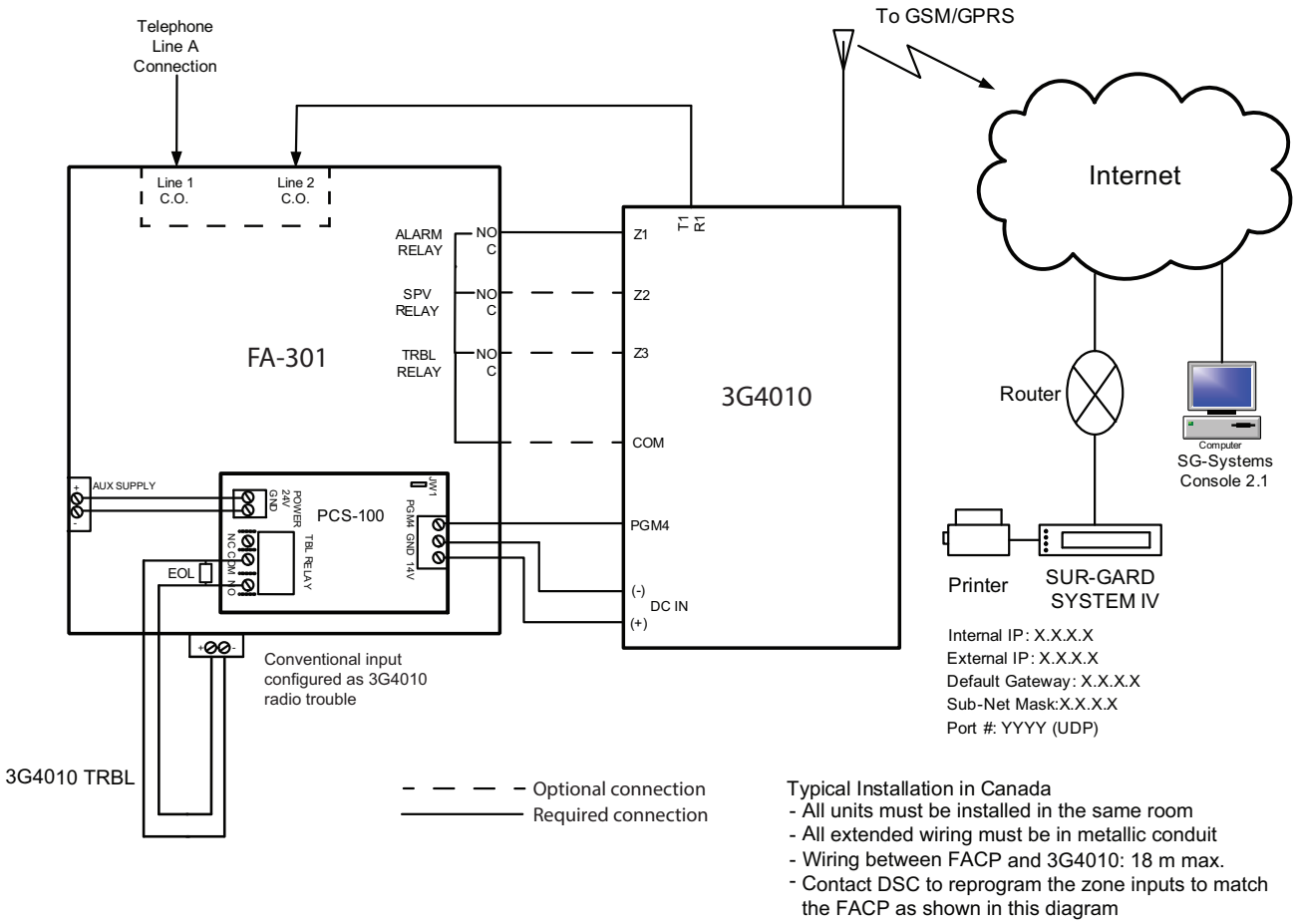

Figure 22 Connecting an FACP to a 3G4010 Interface Device

Note: The DSC interface device 3G4010 is required if the installation requires ULC S559 certification.

7.4 Connecting to a 3G4010CF Interface Device outside Canada

For information on Compatible Receivers see Appendix A: Compatible Receivers.

A typical connection is shown in Figure 23. The 3G4010CF is powered separately from the PCS-100 and requires 2 DSC RM-2 relays (sold separately). The PCS-100 Passive Communications Interface Board (sold separately) is also required.

FA-301 - 3G4010CF Connection - Typical Diagram

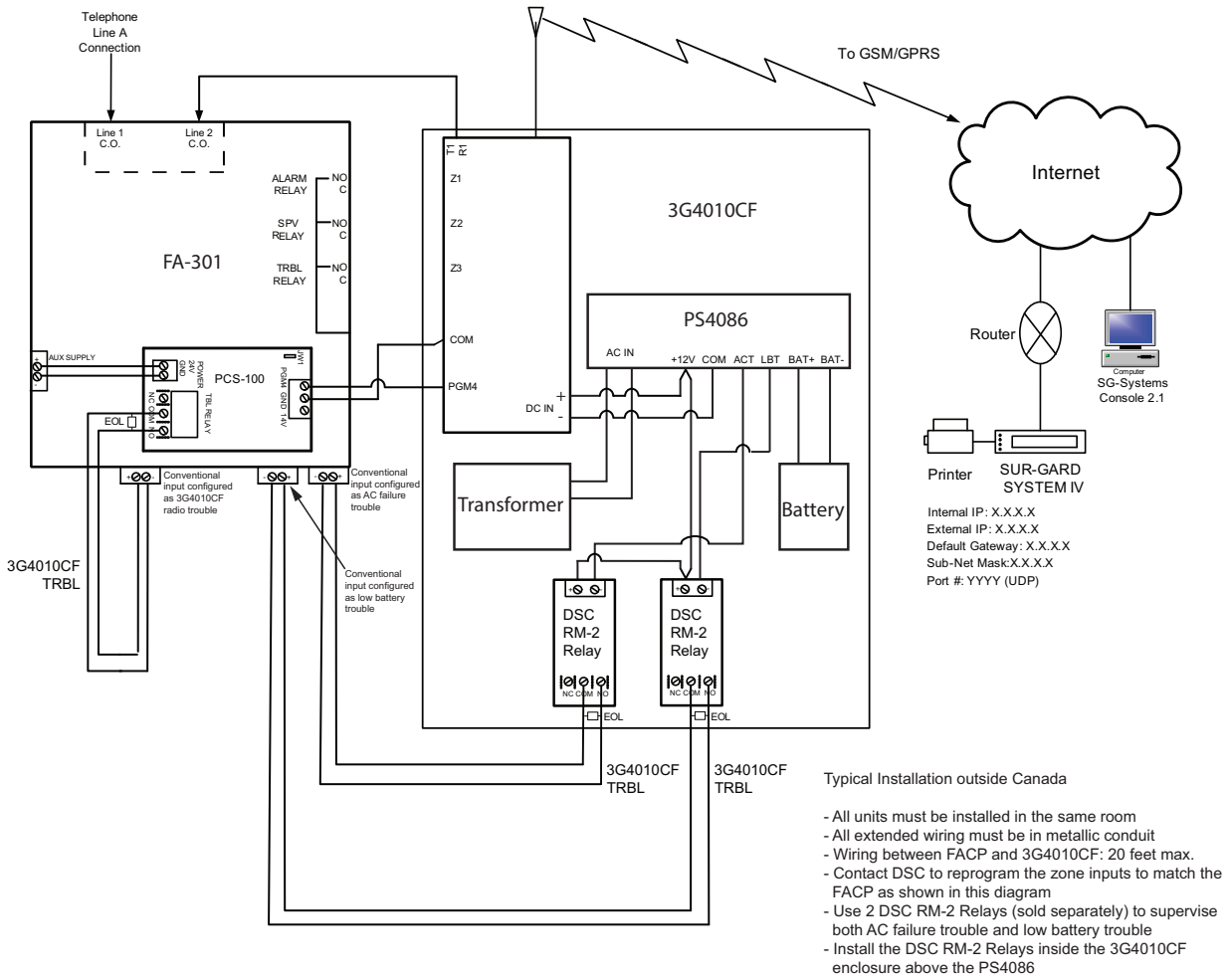

Figure 23 Connecting an FACP to a 3G4010CF Interface Device outside Canada

Note: The DSC interface device 3G4010CF is required if the installation requires UL864 10th edition certification.

7.5 Polarity Reversal and City Tie Module (PR-300) Wiring

Wire PR-300 Polarity Reversal and City Tie Module (if used) as shown in Figure 24, below. See Appendix A: Compatible Receivers for module specifications. Power Limited cable type FPL, FPLR or FPLP must be used.

For USA installation, the installer must use **Atlantic Scientific (Tel: 407-725-8000), Model #24544 Protective Device**, or similar **UL-Listed QVRG secondary protector**, as shown.

For use in Canada, the Protective Device is not required but still recommended.

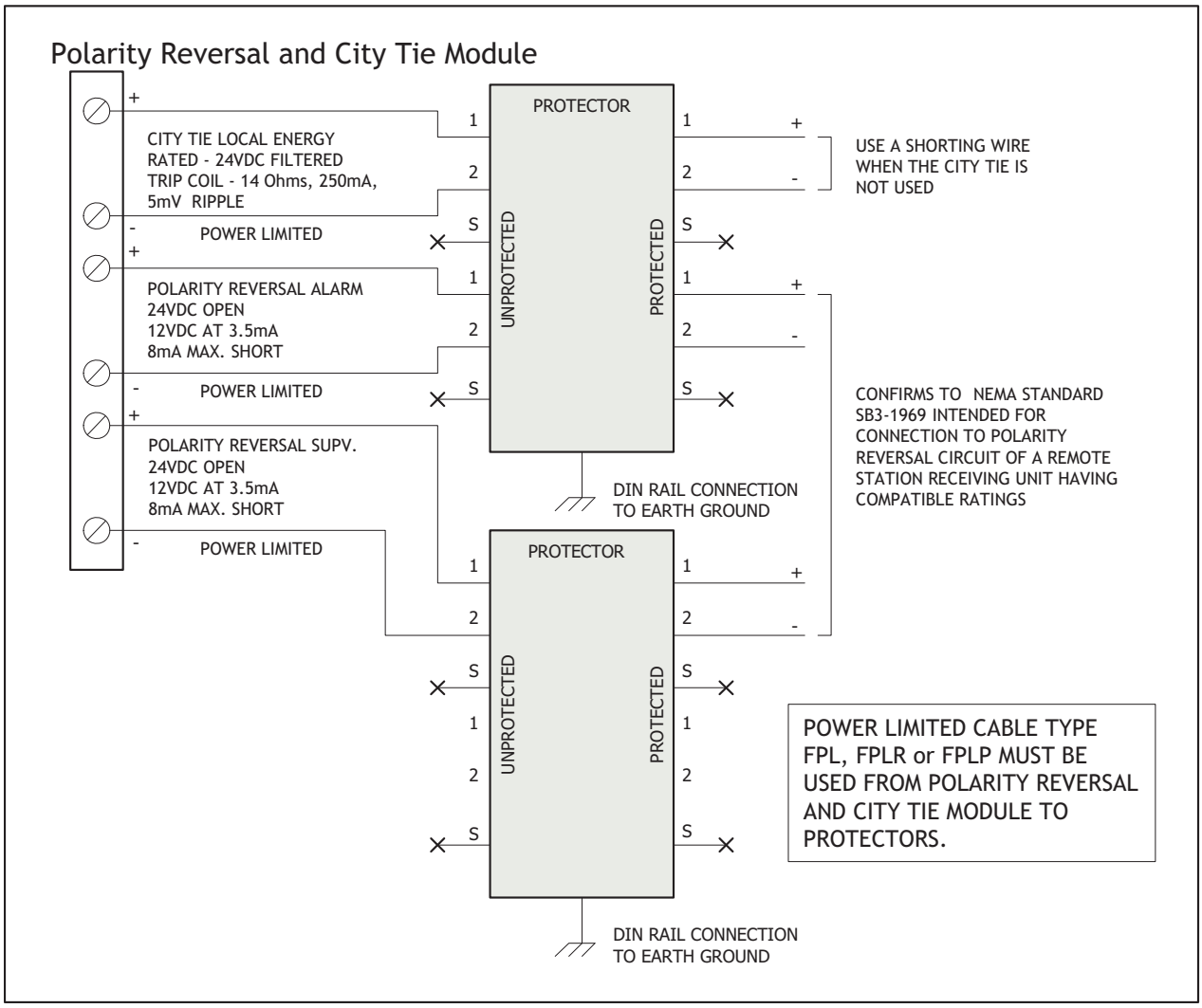

Figure 24 Polarity reversal and city tie module terminal connection

7.6 Power supply connection

The power supply is part of the Main Chassis. The ratings are:

Table 2 Power Supply Ratings

Type	Rating
Electrical Input rating	120VAC, 60Hz, 3A\ 240 VAC, 50 Hz, 1.5A
Power supply total current	6A maximum
Battery fuse on Main module	10A, slow blow micro fuse

Caution: Do not exceed power supply ratings.

Wire the power supply as shown in Figure 25 using the proper wire gauge. See Appendix C: Specifications for power supply specifications.

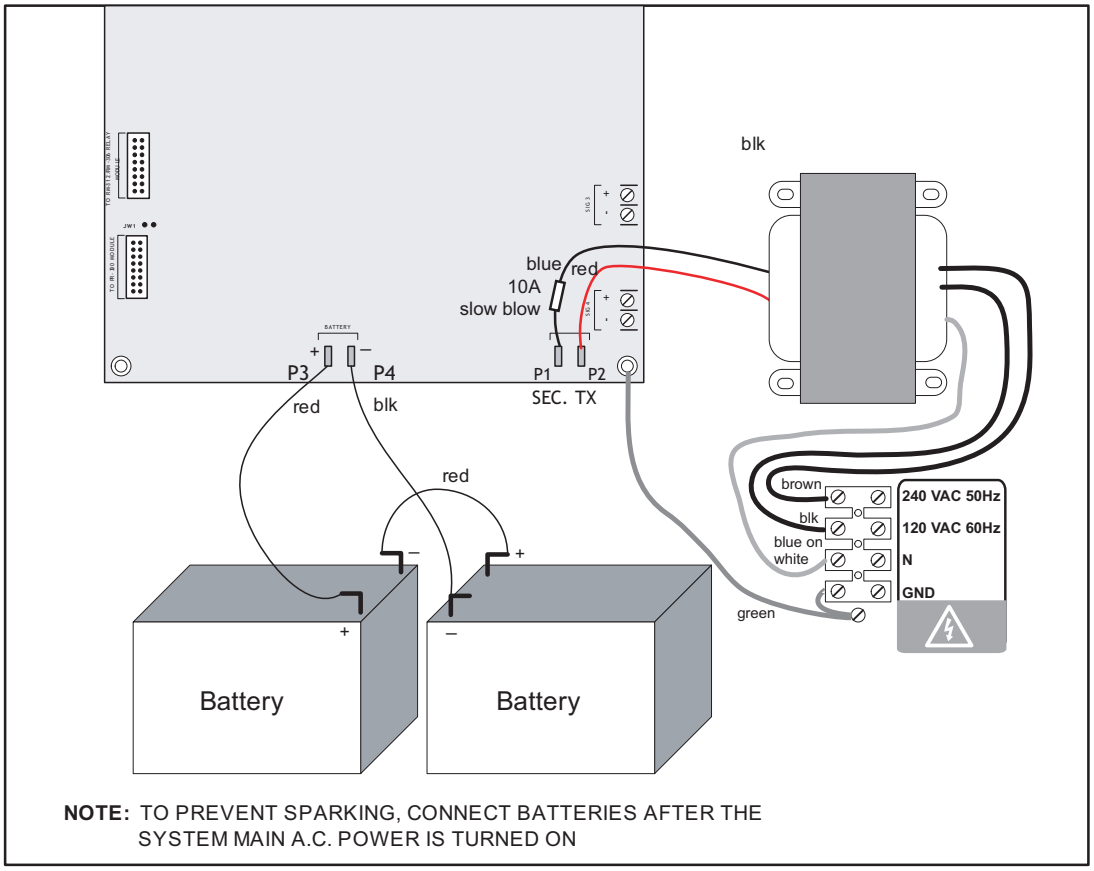

Figure 25 Power supply connection

7.7 Wiring Tables and Information

The numbers in these tables represent the entire loop length.

Table 3 Initiating Circuit Wiring

Wire gauge	Maximum wiring run to last device	
AWG	Feet	Meters
22	2990	910
20	4760	1450
18	7560	2300
16	12000	3600
14	19000	5800
12	30400	9200

Notes: For Class A the maximum wiring run to the last device is divided by two.

Maximum loop resistance should not exceed 100 Ω.

Maximum capacitance of 0.5 µF total on each initiating circuit.

Table 4 Indicating Circuit Wiring

Total signal load in Amperes	Maximum wiring run to last device								Max. loop resistance in ohms
	18 AWG		16 AWG		14 AWG		12 AWG		
	Feet	Meters	Feet	Meters	Feet	Meters	Feet	Meters	
0.06	2350	716	3750	1143	6000	1829	8500	2591	30
0.12	1180	360	1850	567	3000	915	4250	1296	15
0.30	470	143	750	229	1200	366	1900	579	6
0.60	235	71	375	114	600	183	850	259	3
0.90	156	47	250	76	400	122	570	174	2
1.20	118	36	185	56	300	91	425	129	1.5
1.50	94	29	150	46	240	73	343	105	1.2
1.70	78	24	125	38	200	61	285	87	1.0

Notes: For Class A wiring the resistance in ohms is multiplied by two.

Maximum voltage drop should not exceed 1.8 volts.

Table 5 RS-485 Wiring to Annunciators and other Devices

Wire gauge	Maximum wiring run to last device	
AWG	**Feet**	**Meters**
22	2000	609.6
20	4000	1219.2
18	8000	2438.4

Notes: Use twisted shielded pair,

300mA power limited.

Maximum 40 Ω loop resistance

7.8 Four-Wire Smoke Power

4-wire smoke power is provided for 4-wire smoke detectors. This filtered supply is supervised therefore a short disconnects the power through the relay until the SYSTEM RESET button is pressed. This supply is rated at 22.3VDC Nominal/300mA max/1V voltage drop maximum.

7.9 Supervised Auxiliary Power

Supervised auxiliary power is used to power the remote annunciators and smart relay modules. This filtered circuit is supervised therefore a short disconnects the power through the relay until the SYSTEM RESET button is pressed. This supply is rated at 22.3VDC Nominal/ 500mA max/1V voltage drop maximum.

7.10 Auxiliary Power

This special application supply is not supervised. This supply is rated at 24VDC Nominal/1.7A max. If there is a short on this circuit, the auxiliary power does not recover automatically when the short is removed. The main power must be disconnected, then reconnected and the panel reset to re-establish the auxiliary power supply. See Appendix E: Auxiliary Devices on page 103.

8.0 Turning on the Panel

8.1 Before Connecting the Power

1. To prevent sparking, **do not connect** the batteries. Connect the batteries after powering the system from the main AC supply.
2. Check that all modules are installed in the proper location with the proper connections.
3. Check all field (external) wiring for opens, shorts, and ground.
4. Check that all interconnection cables are secure, and that all connectors are plugged in properly.
5. Check all jumpers and switches for proper setting.
6. Check the AC power wiring for proper connection.
7. Check that the chassis is connected to **EARTH GROUND** (cold water pipe or ground rod).
8. Make sure to **close the front cover plate** before powering the system from main AC supply.

8.2 Power-up procedure

After completing the steps in 8.1 above:

1. Plug in the AC power.

   The A.C. ON LED illuminates, the TRBL LED flashes, and the buzzer sounds.
2. Press the SYSTEM RESET button.

   The buzzer continues to sound and the TRBL LED continues to flash.
3. Connect the batteries as shown in Figure 26 below. Observe the correct polarity: the red wire is positive (+) and black wire is negative (−).

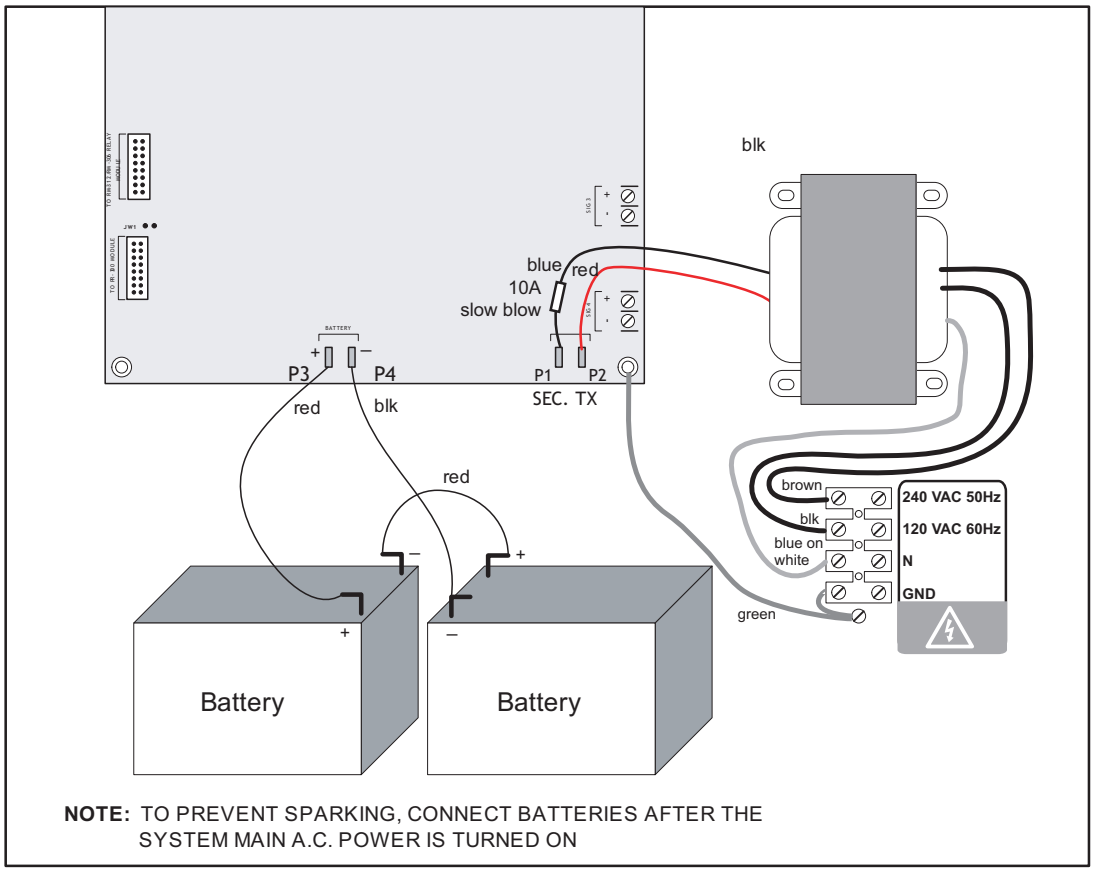

Figure 26 Battery connections

All indicators should be off except for the green A.C. ON LED and the green Trouble Relay LED on the left side of the main board. It is shown in Figure 7 on page 22.

Note: The green Trouble Relay LED on the left side of the main board is illuminated when the system is normal. This LED is for diagnostics and indicates that the Trouble Relay is in normal standby condition.

4. Configure the Fire Alarm Control Panel as described in section 11.0 on page 60.

8.3 Troubleshooting

Symptoms	Possible Cause
Circuit Trouble	Normally when a circuit trouble occurs, its designated trouble indicator is illuminated, as well as the COMMON TROUBLE indicator and trouble buzzer. To correct the fault, check for open wiring on that particular circuit loop, and check that the circuit is not disconnected or bypassed. For information about disconnecting circuits, see section 9.5 on page 50. *Note: Disconnecting a Circuit causes a system trouble.*
Remote Fail	Remote Fail is indicated on the main panel display for any failure reported by, or failure to communicate with a remote annunciator or other remote device.
Ground Fault	This panel has a **common ground fault detector**. To correct the fault, check for any external wiring touching the chassis or other Earth Ground connection.
Battery Trouble	Check for the presence of batteries and their conditions. Low voltage (below 20.4 V) causes a battery trouble. If battery trouble condition persists, replace batteries as soon as possible.
Walk Test Mode	If the Walk Test LED is illuminated steadily, the system is in Walk Test Mode. See section 11.9 on page 78.
Common Trouble	If only the COMMON TROUBLE LED is illuminated on the main panel and none of the above confirming trouble indicators are on, check the following: • Any missing interconnection wiring. • Any Module missing that was part of the Configuration. • Improperly secured cabling.

9.0 Indicators, Controls and Operations

Refer to Figure 27 below for LED Indicator and Control Button locations.

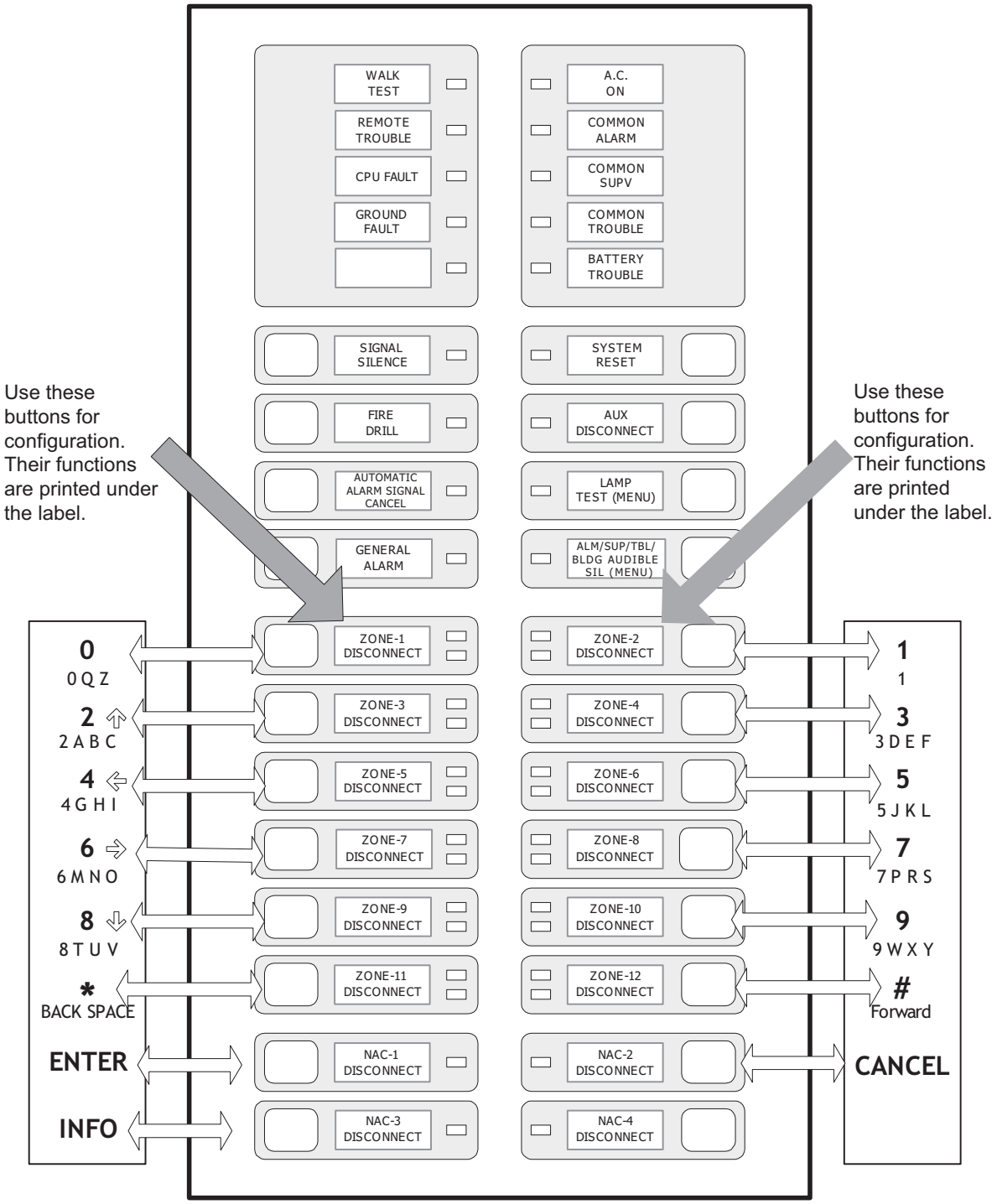

Figure 27 LED indicators and control buttons

The Main Display Panel on the Main Fire Alarm Control Board consists of:

- 18 common LED Indicators (top half of display)
- 8 Common Buttons (top half of display)
- Up to 12 Initiating Circuit Alarm LEDs and 12 Initiating Circuit Trouble LED Indicators
- 4 Indicating Circuit LEDs (labeled NAC - Notifying Appliance Circuit)
- Up to 16 disconnect buttons (12 for initiating circuit and 4 for indicating circuits)

LED Indicators may be amber, red, or green, and may illuminate continuously (steady), or at one of two flash rates.

- Fast flash (Supervisory)- 120 flashes per minute, 50% duty cycle
- Trouble flash (Trouble)- 20 flashes per minute, 50% duty cycle

Note that each display is supplied with laser printer printable paper labels for sliding into the plastic label template on the panel. For the Main Display, the paper label is part number **NP-2005**; this includes English and French versions.

Note: There are different labels for two stage operation.

9.1 Common Indicators

9.1.1 Buzzer

The buzzer is activated by any of the following events:

Fire Alarm	Continuous
Supervisory Alarm	120 times per minute
Trouble	60 times per minute

If the buzzer is turned on in response to a Non-Latching Trouble or Supervisory, it is turned off if the condition causing it goes away and there is no other reason for it to be on.

9.1.2 A.C. ON LED

The green AC ON Indicator illuminates steadily as long as the main AC power is above minimum level. The LED turns off when the level falls below the power-fail threshold and the panel is switched to standby (battery) power.

9.1.3 COMMON ALARM LED

The red COMMON ALARM LED illuminates steadily whenever the panel detects an alarm condition on any initiating circuit. Pressing the GENERAL ALARM button also turns on the COMMON ALARM LED. The LED remains on until the SYSTEM RESET button is pressed.

9.1.4 COMMON SUPERVISORY LED

The amber COMMON SUPERVISORY LED illuminates steadily when there is a Supervisory Alarm in the panel caused by any Latching or Non-Latching Supervisory Circuit. The LED is turned of when all Non-Latching Supervisory Circuits are restored and there are no active Latching Supervisory Circuits. Latching Supervisory Alarms remain active until the SYSTEM RESET button is pressed.

9.1.5 COMMON TROUBLE LED

The amber COMMON TROUBLE LED illuminates steadily when the panel detects any trouble condition. It turns off when all Non-Latching Troubles are cleared.

9.1.6 REMOTE TROUBLE LED

The amber REMOTE TROUBLE LED flashes at the Trouble flash rate if there is trouble detected at a City Tie or DACT, or if there is communication trouble detected with a Remote Annunciator or if a Remote Annunciator reports a local trouble. It is turned off if these conditions go away.

9.1.7 FIRE DRILL LED

The amber FIRE DRILL LED illuminates steadily while Fire Drill is active.

9.1.8 AUTOMATIC ALARM SIGNAL CANCEL LED (or ALM/SUP/TBL/BLDG AUDIBLE SIL LED for single stage systems)

If the panel is configured as a two-stage system, the AUTOMATIC ALARM SIGNAL CANCEL (Acknowledge) LED illuminates steadily when the Alarm timer is canceled by the activation of the AUTOMATIC ALARM SIGNAL CANCEL or SIGNAL SILENCE buttons. The LED goes out when the SYSTEM RESET button is pressed.

This LED can be configured to flash amber at the fast rate while the Auto General Alarm timer is running (see section 11.0 on page 60). If the Auto General Alarm timer times out and puts the panel into General Alarm, the LED turns off.

Note: If this LED is configured to flash, then the panel is outside of UL/ULC certification acceptability. The authority having jurisdiction must approve this selection.

If the panel is not configured as a two-stage system, this LED is ALM/SUP/TBL/BLDG AUDIBLE SIL (buzzer silence). It flashes at the slow rate when the ALM/SUP/TBL/BLDG AUDIBLE SIL button is pressed.

9.1.9 GENERAL ALARM LED

The red GENERAL ALARM LED illuminates steadily when the GENERAL ALARM button is pushed, a General Alarm Initiating Circuit is activated, or the Auto General Alarm timer times out. Once the GENERAL ALARM LED is on it stays on until the SYSTEM RESET button is pressed.

9.1.10 WALK TEST LED

The amber WALK TEST LED illuminates steadily to indicate that the panel is in Walk Test Mode. If the panel is left in this mode for over an hour with no operator activity, the panel returns to normal and the WALK TEST LED turns off.

9.1.11 CPU FAULT LED

The amber CPU FAULT LED flashes approximately ¼ second every 2 seconds to indicate a processor failure on the main board. In addition, the buzzer sounds in time with the CPU FAULT LED until the fault is corrected.

To test the CPU FAULT LED

1. Disconnect AC and batteries from the main board.
2. Connect AC and the batteries as described in section 8.0 on page 39.

   If the CPU FAULT LED is functioning properly, it will flash once when the board powers up.

9.1.12 AUXILIARY DISCONNECT LED

The amber AUXILIARY DISCONNECT LED flashes at the Trouble rate when the AUXILIARY DISCONNECT button is pressed. It turns off when the AUXILIARY DISCONNECT button is pressed a second time. When it is flashing, the Auxiliary Alarm Relay is disconnected. Depending on the configuration, the AUXILIARY DISCONNECT button can also disconnect the Common Alarm Relay and Common Supervisory Relay (see section 11.0 on page 60). When the AUXILIARY DISCONNECT LED is flashing, the buzzer sounds.

9.1.13 SIGNAL SILENCE LED

The SIGNAL SILENCE LED flashes amber at the trouble rate when Indicating Circuits are silenced either by the SIGNAL SILENCE button or by the Auto Signal Silence timer. It is turned off when the signals are re-sounded by a subsequent alarm.

9.1.14 BATTERY TROUBLE LED

The amber BATTERY TROUBLE LED flashes at the trouble rate when the battery is either low (below 20.4 VDC) or disconnected.

9.1.15 GROUND FAULT LED

The amber GROUND FAULT LED flashes at the trouble rate when the Ground Fault Detector detects a Ground Fault on any field wiring. It turns off when the Ground Fault is cleared.

9.1.16 SYSTEM RESET LED

This LED illuminates for a short time when the SYSTEM RESET button is pressed.

9.2 Indicating Circuit Indicators

The panel has 1 indicator for each of the 12 initiating circuits (shown in Figure 27). Each indicator has a button and 2 LEDs, shown in Figure 28.

Figure 28 Alarm Circuit Indicator

The Circuit Disconnect Button is described in section 9.5 on page 50. The LEDs are described in the 4 sections below.

9.2.1 Alarm Circuit Indicators

Table 6 applies to Initiating Circuits configured as Verified Alarm, Non-Verified Alarm, Water flow Alarm, Sprinkler Alarm, or General Alarm Circuits.

Table 6 Alarm Circuit Indicators

Event	Circuit Status LED	Configuration
Circuit in Alarm	Steady (red)	
Pre-alarm	Fast flash rate (red)	Verified Alarm Sprinkler Alarm Water flow Alarm
Activated circuit reconnected (when you press the Disconnect button a second time)	Fast flash rate (red) for 5 seconds to indicate a pending alarm	
Event	**Circuit Trouble LED**	**Configuration**
Open circuit (Class B)	Flashes at the trouble rate (amber)	Verified Alarm Non-Verified Alarm Water flow Alarm Sprinkler Alarm General Alarm
Open circuit or Class A trouble	Flashes at the trouble rate (amber)	
Disconnected (Class A)	Flashes at the trouble rate (amber)	
Circuit in Alarm	OFF	

9.2.2 Supervisory Circuit Indicators

This operation applies to Initiating Circuits configured as Latching or Non-Latching Supervisory Circuits. The following table summarizes the indications in response to different events.

Table 7 Supervisory Circuit Indicators

Event	Circuit Status LED	Configuration
Circuit in Alarm	Steady (amber)	Latching Sup. Non-Latching Sup.

Table 7 Supervisory Circuit Indicators (Continued)

Activated circuit reconnected (when you press the Disconnect button a second time)	Fast flash rate (red) for 5 seconds to indicate a pending alarm	
Event	**Circuit Trouble LED**	**Configuration**
Open circuit (Class B)	Flashes at the trouble rate (amber)	Latching Sup. Non-Latching Sup.
Open circuit or Class A trouble	Flashes at the trouble rate (amber)	
Disconnected (Class A)	Flashes at the trouble rate (amber)	
Circuit in Alarm	OFF	

9.2.3 Property and Building Safety Circuit Indicators

This operation applies to initiating circuits configured as property and building safety circuits. The following table summarizes the indications in response to different events.

Table 8 Property and Building Safety Indicators

Event	**Circuit Status LED**	**Configuration**
Circuit Active	Steady (amber)	Property and Building Safety
Activated circuit reconnected (when you press the Disconnect button a second time)	Fast flash rate (red) for 5 seconds to indicate a pending alarm	
Event	**Circuit Trouble LED**	**Configuration**
Open circuit (Class B)	Flashes at the trouble rate (amber)	Property and Building Safety
Open circuit or Class A trouble	Flashes at the trouble rate (amber)	
Disconnected (Class A)	Flashes at the trouble rate (amber)	
Circuit Active	OFF	

9.2.4 Trouble-only Circuit Indicators

This operation applies to initiating circuits configured as Trouble-only Circuits. The following table summarizes the indications in response to different events.

Table 9 Trouble-only Circuit Indicators

Event	Circuit Trouble LED	Configuration
Open circuit (Class B)	Flashes at the trouble rate (amber)	Trouble Only
Open circuit or Class A trouble	Flashes at the trouble rate (amber)	
Disconnected (Class A)	Flashes at the trouble rate (amber)	
Short Circuit	Flashes at the trouble rate (amber)	

9.3 Signal Circuit Indicators

This operation applies to indicating circuits of any type. The Circuit Trouble Indicator flashes amber at the Trouble Rate to indicate short-circuit or open-circuit trouble, or if the circuit is Disconnected.

Table 10 Signal Circuit Indicators

Event	Circuit Trouble LED	Configuration
Open circuit	Flashes at the trouble rate (amber)	Signal
Short Circuit	Flashes at the trouble rate (amber)	
Disconnected	Flashes at the trouble rate (amber)	

9.4 Common Controls

Note: To activate a button, press and hold it for 3 seconds.

9.4.1 SYSTEM RESET Button

The SYSTEM RESET button resets the Fire Alarm Control Panel and all Circuits. In particular, the SYSTEM RESET button does the following:

- Resets all Latching Trouble Conditions
- Resets all Initiating Circuits
- Resets 4-Wire Smoke Supply
- Turns off all Indicating Circuits
- Turns off SIGNAL SILENCE, AUTOMATIC ALARM SIGNAL CANCEL (Acknowledge), and GENERAL ALARM Indicators

- Turns off Fire Drill
- Stops and resets all timers
- Processes inputs as new events
- Does not affect Auxiliary Disconnect
- Reset cannot be activated until the Signal Silence Inhibit timer has expired

9.4.2 SIGNAL SILENCE Button

Press the SIGNAL SILENCE button when the panel is in alarm to turn on the SIGNAL SILENCE LED and deactivate any Silenceable Indicating Circuits. Non-Silenceable Circuits are unaffected. Signals resound if there is a subsequent alarm. Pressing SIGNAL SILENCE again resounds all silenceable signals. This button does not function when the signal silence inhibit timer is running (see section 11.3 on page 64). It also does not function if the indicating circuits are active as the result of a fire drill.

In a two-stage system, the SIGNAL SILENCE button silences the stage 1 and stage 2 alarms.

9.4.3 FIRE DRILL Button

The FIRE DRILL button activates all Non-Disconnected Indicating Circuits, but does not transmit any Alarms via the City Tie, Common Alarm Relay or Auxiliary Alarm Relay. Fire Drill activates the signals in the evacuation code programmed. For example in the Temporal Code, the signals pulse on for 0.5 seconds, off for 0.5 seconds in rounds of 3 and then pause for 1.5 seconds and repeat.

Fire Drill is canceled by pressing the button again, or if the Panel goes into a real alarm.

9.4.4 AUTOMATIC ALARM SIGNAL CANCEL (Acknowledge) Button (or ALM/SUP/TBL/BLDG AUDIBLE SIL Button for single stage systems)

If the Panel is configured as a two-stage system, pressing the AUTOMATIC ALARM SIGNAL CANCEL (Acknowledge) button while the Auto General Alarm timer is running (there is an alarm in the panel, but it is still in the first stage), cancels the timer and illuminates the amber AUTOMATIC ALARM SIGNAL CANCEL LED steadily, thereby acknowledging the alarm.

If the Panel is not configured as a two-stage system, this button becomes ALM/SUP/TBL/BLDG AUDIBLE SIL (buzzer silence). Press this button to silence the buzzer.

9.4.5 GENERAL ALARM Button

Press the GENERAL ALARM button to immediately send the panel into General Alarm or total evacuation. It also re-activates the signals if they have been silenced during General Alarm. The General Alarm condition remains active until the SYSTEM RESET button is pressed.

9.4.6 AUXILIARY DISCONNECT Button

Press the AUXILIARY DISCONNECT button to disconnect the Auxiliary Alarm Relay. The Common Alarm Relay, the Common Supervisory relay and all correlated alarm relays may be disconnected as selected through configuration (see section 11.0 on page 60). Pressing the AUXILIARY DISCONNECT button also causes the COMMON TROUBLE LED to illuminate steadily, the common trouble relay to send a trouble message and the buzzer to flash at the trouble flash rate. Pressing the AUXILIARY DISCONNECT button causes the system to return to normal.

9.4.7 LAMP TEST Button

Press the LAMP TEST button to cause all front panel LEDs (except the CPU FAULT LED) to illuminate steadily and turn the buzzer on. If Lamp Test is active for more than 10 seconds, Common Trouble is activated.

Press and hold the LAMP TEST for 3 seconds to show the information about the system and the firmware version as shown below.

```
12DET/4SIG LED UDACT
Version 1.7.8
```

Figure 29 LAMP TEST

The first line shows the number of zones and panel type and the second line shows the firmware version number.

9.4.8 ALM/SUP/TBL/BLDG AUDIBLE SIL Button (or MENU for single stage systems)

If the Panel is configured as a two-stage system, press the ALM/SUP/TBL/BLDG AUDIBLE SIL (buzzer silence) button to silence the buzzer. The buzzer resounds if there is a subsequent event. Pressing the button when the buzzer is not sounding has no effect.

If the Panel is configured as a single stage system, press the MENU button to select the command menu when a CFG-300 Service Tool with LCD is connected. Otherwise, this button has no effect.

9.5 Circuit (Zone) Disconnect Buttons

There are Circuit (Zone) Disconnect buttons for all initiating and indicating circuits on the Fire Alarm Control Panel. These buttons are located beside their respective indicating LED.

Pressing a Circuit Disconnect button bypasses the associated circuit and turns on its Trouble Indicator, activating Common Trouble. While a Circuit is disconnected, all changes in status (alarms and troubles) on that circuit are ignored. The panel does not activate disconnected indicating circuits. Circuit Disconnect buttons are toggle switches: pressing an activated switch a second time reconnects the circuit.

Disconnecting an active Latching Initiating Circuit (including Alarms, Water flow Alarm, Sprinkler Alarm, General Alarm, and Latching Supervisory) does not affect its status until the SYSTEM RESET button is pressed. Disconnecting an active Non-Latching Initiating Circuit (including Non-Latching Supervisory and Trouble-Only) causes them to behave as if the alarm situation has disappeared. Disconnecting an active indicating circuit immediately deactivates the circuit.

When an Initiating Circuit Disconnect button is pressed again in order to reconnect the circuit, the panel checks the state of the circuit. If the circuit is active, the Status Indicator flashes for 10 seconds at the Fast Rate without processing the input. If the Circuit is not reconnected by then, it is processed as a new input.

Disconnect buttons are also used during Walk Test as described in section 11.9 on page 78.

9.6 Common Relays

9.6.1 Auxiliary Alarm Relay

The Auxiliary Alarm Relay functions the same way as the Common Alarm Relay in every respect except that it can be disconnected by Auxiliary Disconnect with or without other correlated relays if it is programmed to do so (see section 11.0 on page 60). When configured, the relay can also be disconnected if signal silence is active and reconnected if signal silence is de-activated.

9.6.2 Common Alarm Relay

The Common Alarm Relay activates when the common alarm sequence is activated. On a two-stage system the relay may be configured to operate either on the first stage or both the first and second stage alarm (see section 11.0 on page 60). The common alarm relay is disconnected by Auxiliary Disconnect if programmed (see section 11.0 on page 60). The relay remains on until the SYSTEM RESET button is pressed.

9.6.3 Common Supervisory Relay

The Common Supervisory Relay activates when the common supervisory sequence is activated as the result of an alarm on any un-bypassed latching or non-latching supervisory circuit. The relay is turned off if all non-latching supervisory circuits are restored and there are no latching supervisory circuits active. The relay can be disconnected by Auxiliary Disconnect if programmed (see section 11.0 on page 60). The relay functions the same way as an alarm relay if the supervisory relay is disabled (see section 11.0 on page 60).

9.6.4 Common Trouble Relay

The Common Trouble relay is activated when the common trouble sequence is activated as the result of the trouble condition being detected on the system. It is turned off when all troubles are cleared.

Note: Some troubles are latching: once they are detected they remain active until the SYSTEM RESET button is pressed. In this case the common trouble indicator also remains active until the SYSTEM RESET button is pressed. The common trouble is not bypassed by the Auxiliary Disconnect function.

9.7 Circuit Types

9.7.1 Initiating (Detection) Circuit Types

9.7.2 Non-Verified Alarm

A Non-Verified alarm can have pull stations, smoke detectors, or heat detectors attached to it. Activation of any of these devices immediately results in an alarm condition in the Fire Alarm Control Panel. An Alarm condition causes the associated Circuit Status LED and the COMMON ALARM LED to illuminate red.

9.7.3 Verified Alarm

Verified Alarms are verified by a reset and timing procedure, and may include smoke detectors, heat detectors or pull stations. Activation of pull stations or heat detectors results in an alarm condition in the Fire Alarm Control Panel within four seconds. Smoke detectors are verified for a real alarm within 60 seconds, depending upon the startup time of the devices being used. If four seconds is too long a response time for pull stations, then wire them separately on a Non-Verified Alarm Circuit. An alarm condition causes the associated Circuit Status LED and the COMMON ALARM LED to illuminate red.

9.7.4 Sprinkler Alarm (for Sprinkler Flow Sensors)

Sprinkler Alarms are identical to normal Non-Verified Alarms unless Water flow retard operation is enabled. If Water Flow Retard Operation is enabled, then these circuits are sampled every one second. If ten samples are active within any 15-second interval, the Sprinkler Alarm is confirmed and processed. An Alarm condition causes the associated Circuit Status LED and the Common Alarm LED to illuminate red.

Note: Do not use Retard Operation with any external retarding device; maximum retard may not exceed 90 seconds for Canada.

9.7.5 Water Flow Alarm (Water flow Sensors)

Water Flow Alarms are identical to normal Non-Verified Alarms except that any indicating circuits programmed to these circuits (all are by default) are Non-Silenceable. Also, if Water Flow Retard Operation is enabled (see section 11.0 on page 60), these circuits are sampled every one second. If ten samples are active within any 15-second interval, the Water flow Alarm is confirmed and processed. An alarm condition causes the associated Circuit Status LED and the Common Alarm LED to illuminate red.

Note: Do not use Retard Operation with any external retarding device; maximum retard may not exceed 90 seconds for Canada.

9.7.6 Non-Latching Supervisory (For Supervisory Circuits)

Activation on these circuits causes the Circuit Status LED and the amber COMMON SUPERVISORY LED to illuminate. The buzzer sounds at the fast rate. If the circuit activation is removed, the Supervisory condition clears (as long as there are no other Supervisory conditions in the system) and the Circuit Status LED turns off.

9.7.7 Latching Supervisory (For Supervisory Devices)

Activation on these circuits causes the Circuit Status LED and the amber COMMON SUPERVISORY LED to illuminate. The buzzer sounds at fast rate. If the circuit activation is removed, the Supervisory condition does NOT clear.

9.7.8 General Alarm

The General Alarm provides remote general alarm for remote key switches. In a two-stage system these inputs perform exactly the same function as the Front Panel or Remote

Annunciator General Alarm button. In a single stage system, these inputs act the same as Non-Verified Alarms; however, if Correlations are enabled, General Alarm Initiating Circuits are correlated to ALL indicating circuits.

9.7.9 Property and Building Safety

This is a supervised general-purpose non-latching input used mainly for correlating to a relay circuit associated with property and building safety. No other system condition occurs as a result of its activation (short circuit), although it is supervised for Trouble (open circuit).

9.7.10 Trouble-Only

The Trouble-Only circuit monitors a Trouble Condition from an external device such as QX-5000 Audio System. Both open and short circuits generate a non-latching Trouble condition.

9.8 Indicating (Signal) Circuit Types

9.8.1 Silenceable Signal

The Silenceable Signal circuit is used for audible devices such as bells and piezo mini-horns that may be silenced either manually or automatically. While sounding, these devices follow the pattern appropriate for the condition: the configured Evacuation Code (default is Temporal Code) during Single-Stage Alarm or Two-Stage General Alarm, or the Alert Code during the alert (first) stage of a two-stage alarm.

9.8.2 Non-Silenceable Signal

The Non-Silenceable Signal Circuit is used for audible devices such as bells and piezo mini-horns that may **not** be silenced either manually or automatically. While sounding, these devices follow the pattern appropriate for the condition: the configured Evacuation Code (default is Temporal Code) during Single-Stage Alarm or Two-Stage General Alarm, or the Alert Code during the alert (first) stage of a two-stage alarm.

9.8.3 Silenceable Strobe

Silenceable strobes are silenced when the SIGNAL SILENCE button is pressed. For synchronous strobes see section 10.0 on page 57. *(Note: Strobes do not support any code pattern.)*

9.8.4 Non-Silenceable Strobes

Non-Silenceable Strobes are not silenced when the SIGNAL SILENCE button is pressed. For synchronous strobes see section 10.0 on page 57. *(Note: Strobes do not support any code pattern.)*

9.9 Evacuation codes (Signal Rates)

9.9.1 Single stage codes

Continuous	On 100% of the time
Temporal Code	3 of 0.5 second on, 0.5 second off then, 1.5 second pause

March Code	0.5 second on, 0.5 second off
California Code	5 seconds on, 10 seconds off

9.9.2 Two-step codes

Alert Code	0.5 second on, 2.5 seconds off
General Alarm	Evacuation Code as selected from above.

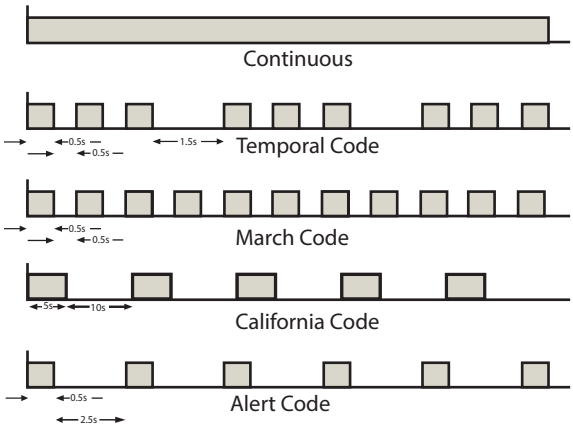

Figure 30 Evacuation and Alert Codes

9.10 Single Stage Operation

In a single stage system all alarm inputs are treated in a similar manner. Alarm inputs include any of the following: Non-Verified Alarm, Verified Alarm, Sprinkler Alarm, Water flow Alarm, and General Alarm Circuits. If any of these alarm inputs occur when the panel is not already in alarm, the following occurs:

- The buzzer sounds steadily
- If Fire Drill is active, it is canceled
- The Common Alarm Indicator turns on
- The Common Alarm, Auxiliary Alarm and all correlated relays activate if Auxiliary Disconnect is not active
- The Auto Signal Silence Timer, if configured, starts.
- The Signal Silence Inhibit Timer, if configured, starts
- All connected relays programmed to the input are activated (provided that Aux Disconnect is not active)
- Non-disconnected strobes associated with the input are activated
- Non-disconnected signals associated with the input are activated at the evacuation rate

Pressing the General Alarm button on the panel also initiates a general alarm.

Subsequent alarms when the panel is already in alarm cause the following:

- The alert buzzer sounds steadily
- If Signals have been silenced as a result of the Signal Silence button or the Auto Signal Silence Timer, Signals are resounded as they were before Signal Silence, the Signal

Silence Indicator is turned off, and the Auto Signal Silence Timer, if configured, is restarted.

- Any additional non-disconnected strobes associated with the new input are activated continuously
- Any additional non-disconnected signals associated with the new input are activated at the evacuation rate

9.11 Two-stage Operation

In a Two-Stage System Alarm inputs are either First Stage (Alert) inputs or Second Stage (General Alarm) inputs. First Stage inputs include inputs from the following types of circuits: Non-Verified Alarm, Verified Alarm, Sprinkler Alarm, and Water flow Alarm. Second Stage inputs include Alarms on General Alarm Circuits, activation of the General Alarm button, or expiration of the Auto General Alarm Timer.

If any of these alarm inputs occur when the panel is not already in alarm, the following occurs:

- The buzzer sounds steadily.
- If Fire Drill is active, it is canceled.
- The Common Alarm Indicator turns on.
- The Common Alarm, Auxiliary Alarm and all correlated relays activate if Auxiliary Disconnect is not active.
- The Auto Signal Silence Timer, if configured, starts.
- The Signal Silence Inhibit Timer, if configured, starts.
- All non-disconnected relays programmed to the input are activated provided that Auxiliary Disconnect is not active.

If the alarm is a Second Stage alarm all connected strobe circuits are activated continuously, all non-disconnected signal circuits are activated at the evacuation rate, and the GENERAL ALARM LED is turned on.

If the alarm is a First Stage alarm, the following occurs:

- Non-disconnected strobe circuits programmed to that circuit are activated continuously.
- Non-disconnected signal circuits programmed to that circuit are activated with the Alert Code (see section 9.8 on page 53).
- The Auto General Alarm Timer, if configured, starts.
- The AUTOMATIC ALARM SIGNAL CANCEL (Acknowledge) LED starts flashing if programmed. See section 11.0 on page 60.

Subsequent First Stage alarms when the panel is already in alarm cause the following:

- The buzzer sounds steadily.
- If Signals have been Silenced as a result of the SIGNAL SILENCE button or the Auto Signal Silence Timer, Signals are resounded as they were before Signal Silence, the SIGNAL SILENCE LED is turned off, and the Auto Signal Silence timer, if configured, is restarted.
- If the panel is not already in General Alarm, additional non-Disconnected Signals programmed to the new input are activated with the Alert Code (see section 9.8 on page 53).

- If the panel is not already in General Alarm and if the AUTOMATIC ALARM SIGNAL CANCEL LED is on steady, indicating that the Auto General Alarm Timer has been acknowledged, the timer is restarted and the AUTOMATIC ALARM SIGNAL CANCEL LED is extinguished (or blinks if it has been configured to blink).

A Second Stage Alarm (General Alarm) when the panel is already in alarm causes the following:

- The buzzer sounds steadily.
- All non-disconnected signals are activated at the evacuation rate.
- If the SIGNAL SILENCE LED is on, it is turned off and the Auto Signal Silence Timer, if configured, is restarted.
- The AUTOMATIC ALARM SIGNAL CANCEL LED if on, is turned off.

Alarm inputs are latching, which means that they remain active until the SYSTEM RESET button is pressed. Note that if the system is configured for **Correlations**, any **Second Stage/ General Alarm** (caused by the Auto General Alarm Timer, the GENERAL ALARM button on the Front Panel or Remote Annunciator, or by a General Alarm Initiating Circuit) condition activates **ALL Indicating Circuits,** whether they are correlated or not.

10.0 Supported Protocols/Devices

10.1 Synchronous Strobes

A separate compatibility list is available for different supported models.

Strobes can be configured as normal (not synchronized or any of the above; see section 11.0 on page 60*)*. Any selection made is system-wide (that is, whatever is selected applies to all the circuits in the system, configured as strobes).

10.1.1 Signal Silence Action on Strobes

The signal silence action on strobes depends upon the configuration. The following describes the signal silence action on non-silenceable and silenceable strobes.

10.1.2 Non Silenceable Strobes

If the output zone is configured as Non-Silenceable Strobe and if signal silence is active on the panel while the strobes are active, the horn will be silenced but the strobe will remain on. If the signal is activated again, the panel activates the horn again.

10.1.3 Silenceable Strobes

If the output circuit is configured as Silenceable Strobe, and if the SIGNAL SILENCE LED is flashing on the panel, both the horn and strobe are completely turned off by turning off the output circuit. Pressing the SIGNAL SILENCE button again turns them on again.

Note: Please see the strobes manufacturer's data for details.

10.2 System Sensor's i^3 Devices

The FA-300 fire control panel supports System Sensor's i^3 devices. Only the two wire smoke detectors are supported on the i^3 zone, which are 2W-B and 2WT-B. Model 2WT-B features a built-in fixed temperature (135F / 57.2C) thermal detector and is capable of sensing a freeze condition i.e. if the temperature is below 41F / 5 C.

The zones should be programmed to i^3 devices to be considered as i^3 zone (see Chapter 11.0). If the zone is not programmed as i^3 zone and i^3 devices are connected to the zone, it is simply treated as a regular zone. The panel is capable of detecting multiple troubles; if different devices have different troubles on the same zone, all troubles are reported. The following troubles are reported for the i^3 devices.

10.2.1 i^3 Zone Troubles

The following troubles can be reported for a zone configured as i^3 zone:

- Open circuit trouble

- Communication trouble
- Out of sensitivity: defective or dirty device
- Freeze trouble

10.2.2 Open Circuit Trouble

If the loop is broken the panel shows open loop trouble. The panel can still communicate with the devices depending upon where the open occurs.

```
Zone-1
Open Trb.        1/ 1
```

Figure 31 Open Circuit Trouble

10.2.3 Communication Trouble

If there is a fault in the line or the line is too noisy, the panel cannot communicate with the devices. The panel shows a communication trouble in this case.

```
Zone-1
Communic. Trb    1/ 1
```

Figure 32 Communication Trouble

10.2.4 Dirty Device Trouble

If any of the devices on the i^3 zone are dirty, the panel shows a Dirty Device trouble. The device needs cleaning or be replaced with a new device.

```
Zone-1
Dirty Dev. Trb   1/ 1
```

Figure 33 Dirty Device Trouble

10.2.5 Out of sensitivity Trouble

If any of the devices on the i^3 zone is out of sensitivity and cannot detect an alarm condition, the panel shows out of sensitivity trouble. In this condition the device is not usable and should be replaced.

```
Zone-1
Out of Sens Trb 1/ 1
```

Figure 34 Out of sensitivity Trouble

10.2.6 Freeze Trouble

If the device has detected a freeze condition, (e.g. the temperature is below 41F / 5 C) then the panel displays a freeze trouble. Only model 2WT-B is capable of thermal detection; model 2W-B does not indicate any freeze trouble.

```
Zone-1
Freeze Trb.      1/ 1
```

Figure 35 Freeze Trouble

The LEDs on the i^3 smoke detectors provide a local visual indication of the detector status.

The smoke detector LED status should be confirmed with the panel, since Out of Sensitivity and a Dirty Device have the same LED indication on the detector and the only way to distinguish between the two is to use the CFG-300 Configuration Tool and check the messages as noted above.

Table 11 i3 Smoke Detector LEDs

i^3 Detector Condition	Green LED	Red LED
Power-up	Blinks every 10 sec	Blinks every 10 sec
Normal (Standby)	Blinks every 5 sec	OFF
Out of sensitivity (defective or dirty)	OFF	Blinks every 5 sec
Freeze trouble	OFF	Blinks every 10 sec
Alarm	OFF	Solid

11.0 Configuration with the CFG-300 LCD Service Tool

Table 12 Settings permitted in CAN/ULCS527

NOTICE TO USERS, INSTALLERS, AUTHORITIES HAVING JURISDICTION, AND OTHER INVOLVED PARTIES			
This product incorporates field-programmable software. In order for the product to comply with the requirements in CAN/ULCS527, Standard for Control Units for Fire Alarm Systems, certain programming features or options must be limited to specific values or not used at all as indicated below.			
Program feature or option	Permitted in CAN/ ULCS527? (Y/N)	Possible settings\methods	Settings permitted in CAN/ULCS527
Account Reporting Format (see page 82 and page 83)	Y	Contact ID, SIA 300, SIA 110	Contact ID if connected to a DSC transmitter
Manual Signal Silence (see page 65)	Y	Enabled, Disabled	Enabled
Auto Signal Silence Timer (see page 67)	Y	Disabled, 5, 10, 15, 20, 30 minutes	Disabled for NAC circuits for dwelling units, all settings are allowed for other NACs
Signal Isolators (see page 68)	Y	Enabled, Disabled	Enabled only when suite isolators are used
Signal Rate (see page 68)	Y	Temporal, Continuous, March Time, California	Temporal
Active EOL (see page 68)	Y	Enabled, Disabled	Enabled if using an active EOL resistor or ICAC-306
Supervisory Circuit Type (see page 51)	Y	Latching, Non-latching	Latching
Aux Disconnect disconnects Common Alarm and Common Supervisory (see page 67)	Y	Enabled, Disabled	Disabled
Dialer Operation Mode (see page 85)	Y	(U)DACT, DACT	(U)DACT
AC Loss Delay (see page 82)	Y	0 to 20 hours	0 to 3 hours
Cellular Report Date and Auto Test Time (see page 87)	Y	Day of month and Time of day	Set Cellular Report Date to 0 Set Auto Test Time to 3:00 (see page 87)

Table 13 Settings permitted in UL864

NOTICE TO USERS, INSTALLERS, AUTHORITIES HAVING JURISDICTION, AND OTHER INVOLVED PARTIES			
This product incorporates field-programmable software. In order for the product to comply with the requirements in UL864, Standard for Control Units and Accessories for Fire Alarm Systems, certain programming features or options must be limited to specific values or not used at all as indicated below.			
Program feature or option	Permitted in UL864? (Y/N)	Possible settings\methods	Settings permitted in UL864
Account Reporting Format (see page 82 and page 83)	Y	Contact ID, SIA 300, SIA 110	Contact ID if connected to DSC transmitter
Manual Signal Silence (see page 65)	Y	Enabled, Disabled	Enabled
Signal Silence Inhibit (see page 66)	N	Disabled, 10 seconds, 20 seconds, 30 seconds, 1 minute	Disabled
Signal Isolators (see page 68)	Y	Enabled, Disabled	Disabled
Signal Rate (see page 68)	Y	Temporal, Continuous, March Time, California	Temporal
Active EOL (see page 68)	Y	Enabled, Disabled	Enabled if using an active EOL resistor or ICAC-306
Aux Disconnect disconnects Common Alarm and Common Supervisory (see page 67)	Y	Enabled, Disabled	Disabled
Dialer Operation Mode (see page 85)	Y	(U)DACT, DACT	(U)DACT
AC Loss Delay (see page 82)	Y	0 to 20 hours	0 to 3 hours
Cellular Report Date and Auto Test Time (see page 87)	Y	Day of month and Time of day	Set Cellular Report Date to 0 Set Auto Test Time to 3:00 (see page 87)

There are three methods of configuring the FA-300 LED Series Fire Alarm Panels:

- Using the CFG-300 LCD Tool. See this chapter.
- Using a PC or laptop computer with a UIMA converter module.
- Using a PC or laptop computer with remote connection (must use fire alarm with built-in UDACT).

This chapter describes how to configure an FA-300 LED Series Fire Alarm Panel with the CFG-300 LCD service tool.

Figure 36 shows the function of the buttons on the front panel display.

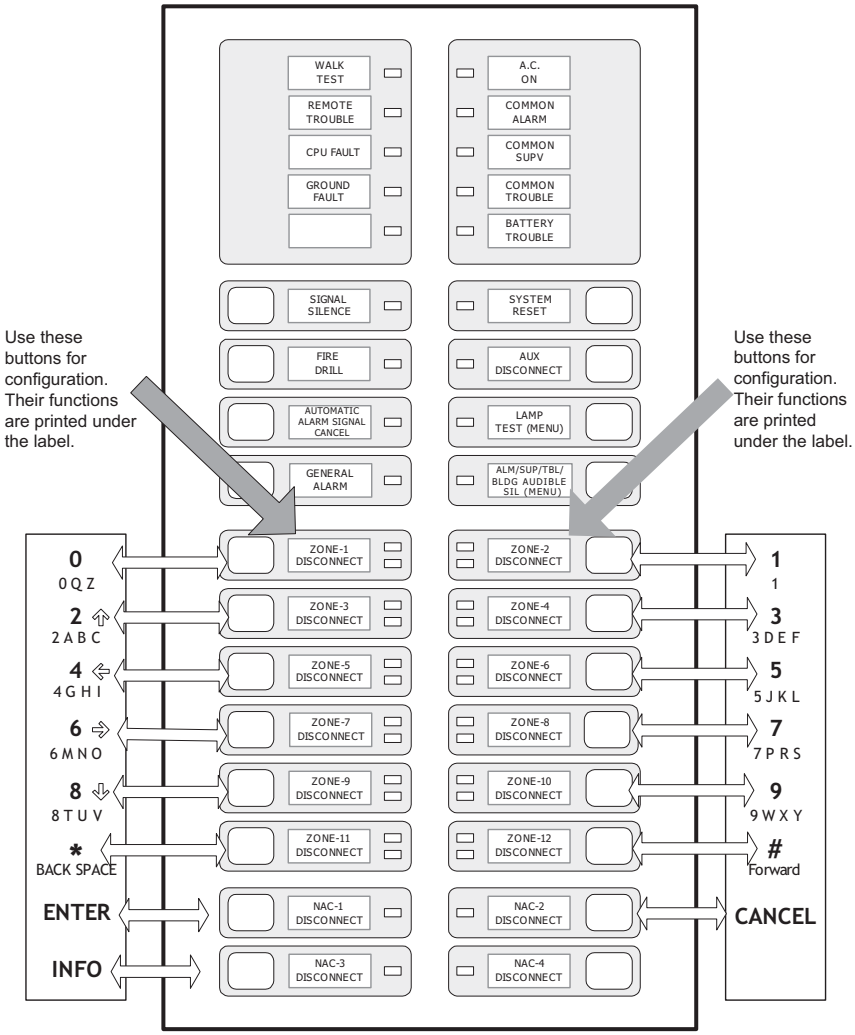

Figure 36 FA-300 Configuration

11.1 Accessing Configuration Mode

To access configuration mode

1. Connect the CFG-300. See the document included with the CFG-300 for details.
2. On a single stage system, press the MENU button.

   On a two stage system, press the LAMP TEST and ALM/SUP/TBL/BLDG AUDIBLE SIL buttons simultaneously.

   The CFG-300 displays the Main Menu.
3. Enter your passcode.

   The minimum number of digits for the passcode is four and the maximum is ten. The passcode must be numerical values only. The default passcode is **1111**.

4. Press the ENTER button.

   The main command menu appears.

5. If the passcode is wrong, the system prompts you to re-enter the passcode. After three tries the system takes you back to the normal message display.

```
Enter passcode
_
```

Figure 37 Enter passcode

11.2 Command Menu

The command menu is shown in Figure 38. The first line of the LCD always displays **-Command Menu-**, and the second line scrolls through different selections.

To scroll through the menu

- Use the up and down arrow buttons, and then press the ENTER button to make a selection.

To exit from the command menu

Select the **Exit** menu option, and then press the ENTER button.

Note: Close jumper JW5 on the main board to access Command Menu features 1 and 9. See Figure 7 on page 22.

```
   -Command Menu-
1. Panel Config
2. Config Info
3. Set Time
4. Set Password
5. View EventLog
6. Clear EventLog
7. Walk Test
8. I3 Loop test
9. Dialer Config
10.Test Dialer
11.Exit
```

Figure 38 Command Menu

11.2.1 Using the Keypad to Program the FA-300

1. Access the configuration mode as described in section 11.0 above.
2. Press ENTER to select an option.

   The corresponding menu appears.
3. Press the up and down arrow buttons to scroll through the menu.
4. Press the left or right arrow buttons to select or unselect an option (selected = **X**). Use the up and down arrows to scroll through the different options.
5. Once you have made the correct selection, press ENTER to confirm the change.
6. Press CANCEL to return to the previous menu.

11.3 FA-300 Config (Command-Menu)

The FA-300 configuration menu is shown in Figure 39.

```
- Panel Config -
1 Features
2 Inp. Zone
3 i3 Zones
4 Opt. Zone
5 Correlation
6 Inp Zone Label
7 Opt Zone Label
8 Default Config
```

Figure 39 FA-300 Config menu

11.3.1 Command Menu/FA-300 Config -->Features

Select **Features** to access the Feature Config menu shown in Figure 40.

```
- Feature Config -
1 Man. Sig. Sil.
2 Fire Drill
3 Opt. Ckt. Corr
4 Wtr/Sprk. Retd
5 Aux Disc Prog
6 Sig-Sil Inh Tm
7 Aux Dis, Alm&Sup
8 Auto Sil. Tmr
9 Rem. Annun.
10 Alm. Xmit-Sil.
11 Pwr Fail Tmr.
12 Com. Supv. Rly
13 Sig-Sil. Isol.
14 Strobe Type
15 Signal Rate
16 Active EOL
17 Two Stage Op.
18 Gen-Alm Tmr
19 Com Alm Rly Op
20 1st stage LED ind
```

Figure 40 Feature Config menu

Table 14 describes the options in the Feature Config menu.

Table 14 Feature Config Menu

Feature	Default	Name in the FA-300 Configuration Utility	Description
Command Menu/FA-300 Config/Features/			

1. Manual Signal Silence
`Manual Sig. Silence`
`[X] ENABLE`
	`[X] ENABLE->Default`
	`[ ] DISABLE`
		Manual signal silence	Use this menu to enable or disable the SIGNAL SILENCE operation. See section 9.4.2 on page 49.

Command Menu/FA-300 Config/Features/			

2.Fire Drill
`Fire Drill`
`[X] ENABLE`
	`[X] ENABLE ->Default`
	`[ ] DISABLE`
		Fire drill	Use this menu to enable or disable the FIRE DRILL operation. See section 9.4.3 on page 49.

Table 14 Feature Config Menu (Continued)

Feature	Default	Name in the FA-300 Configuration Utility	Description
Command Menu/FA-300 Config/Features/			

3.Output Circuit Correlation
`Opt. Ckt. Corr.`
`[X] DISABLE`
	`[X] DISABLE->Default`
	`[ ] ENABLE`
		Signal correlations	If enabled, the programmed correlations (see section 11.3.5 on page 72) are effective. If disabled, the programmed correlations are ignored and all the output circuits are correlated to all the input circuits.

Command Menu/FA-300 Config/Features/			

4.Waterflow/Sprinkler Retard Operation
`Waterflow/Sprk. Retd`
`[X] DISABLE`
	`[X] DISABLE ->Default`
	`[ ] ENABLE`
		Retard waterflow and sprinkler circuit	If disabled, all the initiating circuits configured as water flow or sprinkler act as non-verified alarms. If enabled, retard operation is performed for initiating circuits configured as water flow or sprinkler.
			See section 9.7.5 on page 52.

Command Menu/FA-300 Config/Features/			

5.Aux. disconnect, disconnects Aux Alarm relay and all programmed relays
`Aux Disc Prog`
`[X] DISABLE`
	`[ ] ENABLE`
	`[X] DISABLE->Default`
		"Aux Disconnect" disconnects prog. relay	If disabled, only the Auxiliary Alarm Relay is disconnected when you press AUXILIARY DISCONNECT (see section 9.4.6 on page 49).
			If enabled, the Auxiliary Alarm Relay and all correlated relays are disconnected when you press AUXILIARY DISCONNECT (see section 9.4.6 on page 49). Correlated relays include: RM312/RM306 relays and SRM-312 relays.

Command Menu/FA-300 Config/Features/			

6.Signal-Silence Inhibit timer
`Sig-Sil. Inhibit Tmr`
`[X] DISABLE`
	`[X] DISABLE->Default`
	`[ ] 10 SEC`
	`[ ] 20 SEC`
	`[ ] 30 SEC`
	`[ ] 1 MIN`
		Signal silence inhibit Timer	Use this menu to inhibit the SIGNAL SILENCE button for a desired length of time. While this timer is running, pressing the SIGNAL SILENCE button has no effect. See section 9.4.2 on page 49. According to the Canadian National Building Code, this timer should be set to one minute.

Table 14 Feature Config Menu (Continued)

Feature	Default	Name in the FA-300 Configuration Utility	Description
Command Menu/FA-300 Config/Features/			
7. AUXILIARY DISCONNECT disconnects Alarm Relay and Supervisory Relay Aux Dis,Dis Alm&Spv [X] DISABLE	[ ] ENABLE [X] DISABLE->Default	"Aux Disconnect" disconnects alarm relay	If enabled, the Common Alarm Relay and the Common Supervisory Relay, in addition to the Auxiliary Alarm Relay, are disconnected when you press AUXILIARY DISCONNECT (see section 9.4.6 on page 49). The PR-300 does not transmit a supervisory or alarm event. If disabled, pressing AUXILIARY DISCONNECT has no effect on the Common Alarm Relay, the Common Supervisory Relay, and the PR-300.
Command Menu/FA-300 Config/Features/			
8.Auto Signal Silence Timer Auto Sig-Sil. Timer [X] DISABLE	[X] DISABLE->Default [ ] 5 Min [ ] 10 Min [ ] 15 Min [ ] 20 Min [ ] 30 Min	Signal silence Timer	Use this menu to determine the time period for which the indicating circuits sound before they are automatically silenced.
Command Menu/FA-300 Config/Features/			
9. Number of Remote Annunciators or smart relays No. of Remote Annun. [X] NONE	[X] NONE->Default [ ] 1 [ ] 2 [ ] 3 [ ] 4 [ ] 5 [ ] 6	Remote annunciators	Use this menu to select the number of remote annunciators. Any combination of remote annunciators or smart relays can be used as long as the total number does not exceed 6. The annunciators' addresses should be without gaps and in sequence.
Command Menu/FA-300 Config/Features/			
10.Silence Alarm transmit Alm. Xmit-Sil. [X] DISABLE	[X] DISABLE->Default [ ] ENABLE	Alarm transmit affected by signal silence	Use this function to allow the alarm transmit and auxiliary alarm relay to reset on "SIGNAL SILENCE" rather than the "RESET" switch.
Command Menu/FA-300 Config/Features/			
11.AC power fail delay timer AC Pwr Fail Dly Tmr. [X] NONE	[X] NONE ->Default [ ] 1 HRS [ ] 2 HRS [ ] 3 HRS		Use this menu to delay the AC power fail trouble for the programmed time period. If disabled, the AC power fail is reported right away.
Command Menu/FA-300 Config/Features/			
12.Common Supervisory Relay Common Supv. Relay [X] DISABLE	[ ] ENABLE ->Default [X] DISABLE	Supervisory relay used as alarm relay	If enabled, the Common Supervisory Relay behaves as a common alarm relay. If disabled, it behaves as a common supervisory relay.

Table 14 Feature Config Menu (Continued)

Feature	Default	Name in the FA-300 Configuration Utility	Description
Command Menu/FA-300 Config/Features/			
13.Signal Isolators Sig-Sil. Isolator [X] DISABLE	[ ] ENABLE [X] DISABLE->Default	Isolators on signal circuits	Enable this function only when suite isolators are used (Canada only).
Command Menu/FA-300 Config/Features/			
14.Strobe Type Strobe Type [X] NORMAL	[X] NORMAL ->Default [ ] MIRCOM [ ] FARADY [ ] WHEELOCK [ ] GENTEX [ ] SYSTEM SENSOR	Strobe	Use this menu to select the manufacturer of the strobes used in the system. The selection is system-wide and applies to all indicating circuits configured as strobes. For NORMAL strobes there is no synchronization, while other strobes are synchronized and use manufacturer's protocol to synchronize the strobes.
Command Menu/FA-300 Config/Features/			
15.Signal Rate Signal Rate [X] TEMPORAL	[X] TEMPORAL->Default [ ] CONTINOUS [ ] MARCH TIME [ ] CALIFORNIA	Signal rate	Use this menu to set the rate at which the indicating circuits sound.
Command Menu/FA-300 Config/Features/			
16. Active EOL Active EOL [X] DISABLE	[X] DISABLE->Default [ ] NO	Active end-of-line	Enable this function if you are using an active EOL resistor or the ICAC-306 (the ICAC-306 has built in Active End-of-Line resistors).
Command Menu/FA-300 Config/Features/			
17. Two-stage Operation Two Stage Operation [X] DISABLE	[X] DISABLE->Default [ ] ENABLE	Second stage	Use this menu to allow the system to perform a two-stage operation. This selection also sets the Auto General Timer to 5 minutes. If the Auto Signal Silence Timer is greater than the Auto General Alarm Timer, then no error will occur. If the Auto Signal Silence Timer is equal or less than the Auto General Alarm Timer, then the Auto Signal Silence Timer is disabled and the following warning message is displayed: "Auto Sig. Sil. Has been disabled" The user should always either disable the Auto Signal Silence Timer or set it to be greater than the Auto General Alarm Timer.

Table 14 Feature Config Menu (Continued)

Feature	Default	Name in the FA-300 Configuration Utility	Description
Command Menu/FA-300 Config/Features/			
18. Auto General Alarm Timer Auto Gen-Alarm Timer [X] DISABLE	[X] DISABLE->Default [ ] 5 Min [ ] 10 Min [ ] 15 Min [ ] 20 Min [ ] 30 Min	General alarm Timer	This function is used for two-stage systems only. This function sets the time period for automatic evacuation.
19. Common Alarm Relay Operation Common Alm Rly. Oper [X] SECOND STAGE	[ ] BOTH STAGES->Default [X] SECOND STAGE ONLY	Alarm relay second stage	Use this menu to allow the Common Alarm Relay to operate in second stage only or to operate in both stages.
20. First Stage LED 1st stage LED indic. [X] DISABLE	[X] DISABLE->Default [ ] ENABLE		When disabled, the AUTOMATIC ALARM SIGNAL CANCEL LED does not illuminate during the first stage alarm. When enabled, the AUTOMATIC ALARM SIGNAL CANCEL LED flashes at the fast rate during the first stage alarm. Note: If this option is enabled, then the panel is outside of UL/ ULC certification acceptability. The authority having jurisdiction must approve this selection.

Note: Refer to section 11.2.1 on page 64 for detailed instructions on making menu selections.

11.3.2 Command Menu/FA-300 Config -->Inp Zone

```
Initiating Zone
 1 Zone-1
 2 Zone-2
    --
    --
12 Zone12
```

This **Inp Zone** menu is used to program the process type for the initiating circuits. The maximum number of initiating circuits is 12. Only those supported by the particular model are shown in the CFG-300 Configuration Tool.

Command Menu/FA-300 Config/Ipt. Zone
1.Process Type (Initiating circuit)
`Zone-1 Type`
`[X] NON-VERIF ALARM`
|
|
|
12.
`Zone-12 Type`
`[X] NON-VERIF ALARM`
	`[X] NON-VERIF ALARM`
	`->Default`
	`[ ] VERIF ALARM`
	`[ ] SPRKL ALM`
	`[ ] WTR-FLOW ALM`
	`[ ] NON-LATCH SUP`
	`[ ] LATCH SUPV`
	`[ ] GEN ALARM`
	`[ ] BUILDING`
	`[ ] TRB ONLY`
		Use this menu to select the process type of each input zone. See section 9.7 on page 51.

11.3.3 Command Menu/FA-300 Config -->I3 Zone

I3 Detection Zones [ ] Zone-1 [ ] Zone-2 -- -- [ ] Zone-12	[ ] Zone-1->Default . . . [ ] Zone-12->Default	Use this menu if i^3 devices are present on a zone. See section 10.2 on page 57.

Note: Refer to section 11.2.1 on page 64 for detailed instructions on making menu selections.

11.3.4 Command Menu/FA-300 Config -->Opt Zone

```
Indicating Zone
 1 NAC-1
 2 NAC-2
 3 NAC-3
 4 NAC-4
```

This menu is used to program the process type of the indicating circuits. The maximum number of indicating circuits is 4. Only those supported by the particular model are shown in the CFG-300 Configuration Tool.

Command Menu/FA-300 Config/Opt. Zone **1.Process Type (Indicating Circuits)** NAC-1 Type [X] SIL-ABLE | | | 4. NAC-4 Type [X] SIL-ABLE	[X] SIL-ABLE->Default [ ] NON SIL-ABLE [ ] SIL-ABLE STR [ ] NON-SIL STR	Use this menu to program the process type of each indicating circuit. See section 9.8 on page 53.

Note: Refer to section 11.2.1 on page 64 for detailed instructions on making menu selections.

11.3.5 Command Menu/FA-300 Config-->Correlation

Command Menu/FA-300 Config/Correlation
1.Correlation
`Zone-1 Corr.`
`[X] NAC-1`
|
|
|
12.
`Zone-12 Corr.`
`[X] NAC-1`
	`[X] NAC-1 ->Default`
	`[X] NAC-2 ->Default`
	`[X] NAC-3 ->Default`
	`[X] NAC-4 ->Default`
		Use this menu to correlate initiating circuits to indicating circuits. By default all the initiating circuits are correlated to all the indicating circuits.

Note: Refer to section 11.2.1 on page 64 for detailed instructions on making menu selections.

11.3.6 Command Menu/FA-300 Config -->Inp Zone Label

```
Initiating Zone
 1 Zone-1
 2 Zone-2
    --
    --
12 Zone12
```

Use the buttons described below for entering messages. These buttons are alternate functions of bypass switches and are physically located in the same position as described following.

Command Menu/FA-300 Config/Ipt. Zone Label	
1.Initiating zone label Zone-1 Label Zone-1 | | | 12. Zone-12 Label Zone-12	[Zone-1]->Default [Zone-12]->Default BYPASS SWITCH TRANSLATION KEY SEQ 1 2 3 4 KEY SEQ 1 2 3 4 ---------- Zone-1 **0 Q Z** Zone-2 **1** Zone-3 **2 A B C** Zone-4 **3 D E F** Zone-5 **4 G H I** Zone-6 **5 J K L** Zone-7 **6 M N O** Zone-8 **7 P R S** Zone-9 **8 T U V** Zone-10 **9 W X Y** Zone-11 **Back Space** Zone-12 **Forward**

Note: Refer to section 11.2.1 on page 64 for detailed instructions on making menu selections.

11.3.7 Command Menu/FA-300 Config -->Opt Zone Label

```
Indicating Zone
 1 NAC-1
 2 NAC-2
 3 NAC-3
 4 NAC-4
```

Use the buttons described below for entering messages. These buttons are alternate functions of bypass switches and are physically located in the same position as described below.

Command Menu/FA-300 Config/Opt. Zone Label

1.Indicating zone label NAC-1 Label NAC-1 | | | 4. NAC-4 Label NAC-4	[NAC-1]->Default [NAC-4]->Default BYPASS SWITCH TRANSLATION KEY SEQ 1 2 3 4 KEY SEQ 1 2 3 4 ---------- Zone-1 **0 Q Z** Zone-2 **1** Zone-3 **2 A B C** Zone-4 **3 D E F** Zone-5 **4 G H I** Zone-6 **5 J K L** Zone-7 **6 M N O** Zone-8 **7 P R S** Zone-9 **8 T U V** Zone-10 **9 W X Y** Zone-11 **Back Space** Zone-12 **Forward**

Note: Refer to section 11.2.1 on page 64 for detailed instructions on making menu selections.

11.3.8 Command Menu/FA-300 Config -->Default Configuration

Load the default settings? Y Press the up and down arrow buttons to select between Y/N. Press ENTER to restore the default configuration. Default settings have been loaded	Use this menu to load the default configuration in the panel. **Warning:** When you load the default configuration, the previously programmed configuration is lost permanently.

11.4 Config Info (Command-Menu

Note: Refer to section 11.2.1 on page 64 for detailed instructions on making menu selections.

Configuration type: Factory default Press the down arrow button to see more information.	Configuration type shows how the panel was configured. **Factory default** means the panel has not been configured; it is as it came from the factory. **Front Panel** means it was configured at the panel. **Serial Port** means the configuration was done from a computer through the serial port. **Modem** means the configuration was done remotely through a modem.
Job Name: No job loaded	If you upload a job configuration to the panel using the FA-300 Configuration Utility, the job name appears on this screen. The job name can be up to a maximum of 20 characters.
Technician ID: Unknown Press the down arrow button for further information.	If you upload a job to the panel using the FA-300 Configuration Utility, the technician's name (ID) appears on this screen. The technician ID can be up to a maximum of 10 characters.
Cfg. Date and Time: hh:mm day year:mm:dd Press the down arrow button for further information.	This screen shows the date and time that the configuration was last changed (if Time and Date have been set at the panel).
Configurator Version x.x.x.x	This screen shows the version of the FA-300 Configuration Utility. It displays 0.0.0.0 if the FA-300 Configuration Utility was not used.

11.5 Set Time (Command-Menu)

Note: Refer to section 11.2.1 on page 64 for detailed instructions on making menu selections.

```
1 Daylight Save
2 Time Clock
3 Compensation
```

Command Menu/Set Time
1. Daylight saving time
`Daylight Saving`
`[X] DISABLE`
	`[X] DISABLE ->Default`
	`[ ] ENABLE`
		Use this menu to enable daylight savings time.

Command Menu/Set Time
2. Set time and date
`HH:MM WKD YYYY-MM-DD`
`00:00 MON 2000-01-01`
	`Default`
	`00:00 MON 2000-01-01`
		Use this menu to set the time and date. Use the left and right arrow buttons to move the cursor to the desired location in the display and use the up and down arrow buttons to increase or decrease the values. Press ENTER to accept the changes and press CANCEL to ignore the changes.
		Note: time is in 24 hour format

Command Menu/Set Time
2. Compensation
`Daily Compensation:`
`0`
When value is entered the following message appears
`Daily Compensation:`
`Panel Config Updated`
	`Compensation value can range from -15 to +15 seconds.`	Use the up down arrow buttons to select daily compensation value and press ENTER. For a fast clock adjust negatively. For a slow clock adjust positively. For example: for a clock which runs 5 minutes a month (based on 30 days) fast select -10 seconds.

11.6 Change password (Command-Menu)

Note: Refer to section 11.2.1 on page 64 for detailed instructions on making menu selections.

`Enter new passcode`
`[ ]`
 	
`Re-enter passcode`
`[ ]`
 	
If the passcode does not match, the following message appears:
 	
`invalid passcode`
 	
If the passcode is OK the following message appears:
 	
`Passcode updated`
	`1 -> Default`	Use this menu to change the passcode. The minimum number of digits is 4 and the maximum is 10. Only numeric digits are allowed.

11.7 View Event Log (Command-Menu)

The event log looks the same as the normal event queue (see section 11.15 on page 90). Press the INFO button to see more information about the event. Figure 41 shows an example of how the INFO button works.

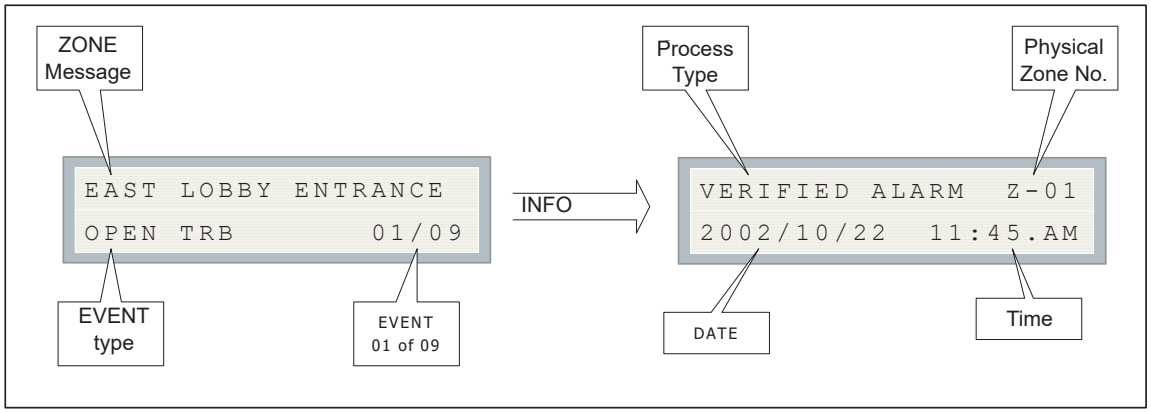

Figure 41 The event log

The event log saves a maximum of 200 events.

11.8 Clear Event Log (Command-Menu)

Note: Refer to section 11.2.1 on page 64 for detailed instructions on making menu selections.

Use this menu to clear alarm logs, event logs, or both.

```
  -Select Log-
1 Alarm Log
2 General Log
3 All Logs
```

Figure 42 Select Log

1. Select the type of log to clear. Press the ENTER button. The system confirms before clearing logs.

```
Clear all the
 selected log(s)? Y
```

Figure 43 Clear all the selected logs

2. Press the ENTER button to confirm or the CANCEL button to cancel the operation.

```

Log(s) cleared
```

Figure 44 Logs cleared

11.9 Walk Test (Command-Menu)

Note: Refer to section 11.2.1 on page 64 for detailed instructions on making menu selections.

A walk test allows an installer to verify the initiating circuit wiring in a system. When walk test is selected, the following screen appears:

```
Perform the
walk test? Y
```

Figure 45 Walk test confirmation

Press the ENTER button to activate the walk test and the CANCEL button to cancel the walk test. The next screen allows zones to be selected for walk test. Use the up and down arrow buttons to scroll through the zones and use the left and right arrow buttons to select a zone. Press the ENTER button when you are done with all the selections.

```
 -WALK TEST ZONES-
[ ] Zone-1
```

Figure 46 Walk test zones

The walk test is now active.

```
 -Walk test active-
Alarm:00      Trb:00
```

Figure 47 Walk test active

The activation of any initiating circuit that has been selected for a walk test causes the Audible Indicating Circuits (not Strobes) to activate briefly for a number of short bursts corresponding to the selected circuit number. If the first selected circuit is activated, the indication circuits sound for one burst. If the second selected circuit is activated, the indication circuits sound for two bursts, and so on. This means that if, for example, circuits 1, 3 and 5 were selected for the walk test, they would sound with one, two and three bursts respectively. The burst interval is half a second on and half a second off. After the sounding pattern has been sent on the indicating circuits, the initiating circuit is reset and tested again. If it is still active (in alarm) the pattern is re-sent. Trouble on any initiating circuit selected for the walk test activates the indicating circuits continuously for five seconds. Activation of a circuit also causes the alarm count to increase while the trouble on the initiating circuit causes the trouble count to increase.

Alarm Verification and Water flow Alarm Retard Operations are disabled on circuits being walk tested. All circuits not selected for the walk test continue to function normally. If a circuit was disconnected before the walk-test mode was entered and is not selected for the walk-test, it remains disconnected while the walk test is active. Walk test operation is disabled if the Fire Alarm Control Panel is in alarm or goes into alarm while the walk test is active.

Notes: If a UDACT is used with the system, all walk-test events are reported to the monitoring agency. The monitoring agency should be instructed to ignore reported events during the walk-test.

IF THERE IS NO ACTIVITY FOR ONE HOUR, THE SYSTEM RETURNS TO NORMAL OPERATION.

11.10 i^3 Loop Test (Command-Menu)

Note: Refer to section 11.2.1 on page 64 for detailed instructions on making menu selections.

The i^3 maintenance test is designed to test the devices on i^3 zone. If there is noise on the line or if the device is too far away from the panel, the devices may not respond to the panel inquiries. An i^3 maintenance test can be invoked from the command menu six minutes after power-up or after pressing the reset. If the i^3 maintenance test is selected, the following message appears on the screen:

```
Perform the i3
Loop test? Y
```

Figure 48 i^3 loop test confirmation

If you select Y by pressing ENTER, the display asks you for which zone you want to perform the i^3 test. Note that only one zone at a time can be in maintenance test. Select the zone by pressing the up and down arrow buttons and then pressing the right arrow button to select the device. After the device is selected press ENTER.

```
   -I3 TEST ZONES-
[ ]Zone-1
```

Figure 49 i^3 test zones

If the i^3 maintenance test is selected within six minutes after power-up or reset, the following information message appears.

```
The selected zone
is not ready yet
```

Figure 50 i^3 test not ready

If a zone is selected that is not configured as an i^3 zone, the following message appears:

```
The selected zone
is not i3 type
```

Figure 51 The selected zone is not i^3 type

After the zone goes into the i^3 maintenance test, no other zone can be put into the test. The maintenance test takes five minutes. During this time you can walk through the device and

make sure all the devices are working properly. The following table lists the status of the devices while in walk test.

Table 15 i3 Detector Statuses

i^3 Detector Condition	Green LED	Red LED
Proper operation	Double blink every 5 sec	OFF
Out of sensitivity	OFF	Double blink every 5 sec
Freeze condition	OFF	Double blink every10 sec

You can cancel the maintenance test either by pressing the SYSTEM RESET button or by going into the configuration section and canceling the test.

11.11 Dialer Config (Command-Menu)

Note: Refer to section 11.2.1 on page 64 for detailed instructions on making menu selections.

Figure 52 shows the Dialer Config menu.

```
 -Dialer Config-
1 Account Info
2 Telephone line
3 Report Options
4 Time Parameter
5 Enable/Disable
```

Figure 52 Dialer Config menu

11.11.1 Command Menu/Dialer Config-->Account Info

```
 - Account Info -
1 Account#1 ID
2 Account#1 Tel
3 Accnt#1 Format
4 Account#2 ID
5 Account#2 Tel
6 Accnt#2 Format
```

Command Menu/Dialer Config/Account Info		

1.Account# 1 Identification
`Account#1 ID:`
`_`
	`123456->Default`	Use this menu to set the Account ID for the monitoring station to which the dialer reports events. The maximum # of digits allowed is six. For contact ID, only the first four digits are used; the last two are truncated.
		Unless you are using the SIA protocol, the allowed digits for the account ID are simple digits 0 to 9 and hexadecimal digits A to F (the SIA protocol only allows digits 0 to 9).
		To enter hexadecimal digits, press the INFO button. The letter “A” appears. To scroll through the rest of the letters, press INFO repeatedly. Press # to move the cursor to the right or press * to move it to the left.

Command Menu/Dialer Config/Account Info		

2.Account#1 Telephone Number
`Account#1 Telnum:`
`_`
	`[101]->Default`	Use this menu to set the telephone number of the monitoring station. The maximum # of digits allowed is 19 including “,” and numerals. The “,” is a 1 sec delay. To enter “,” press the INFO button. Press # to move the cursor to the right or press * to move it to the left. An example of a typical telephone # is 9,,12345678.

Command Menu/Dialer Config/Account Info		

3.Account#1 Reporting Format
`ACCNT#1 Format:`
`[X] Contact ID`
	`[X] CONTACT ID-Default`
	`[ ] SIA 300 Baud`
	`[ ] SIA 110 Baud`
		Set the reporting format that is recognized or preferred by the monitoring station.

Command Menu/Dialer Config/Account Info		
4. Account# 2 Identification Account#2 ID: _	654321->Default	Same as Account#1.
Command Menu/Dialer Config/Account Info		
5.Account# 2 Telephone Number Account#2 Telnum: _	[101]->Default	Same as Account#1.
Command Menu/Dialer Config/Account Info		
6.Account# 2 Reporting Format ACCNT#2 Format: [X] Contact ID	[X] Contact ID-Default [ ] SIA 300 Baud [ ] SIA 110 Baud	Same as Account#1.

Note: Refer to section 11.2.1 on page 64 for detailed instructions on making menu selections.

11.11.2 Command Menu/Dialer Config-->Telephone Line

```
- Telephone Line -
1 Line1 Dialtype
2 Line2 Dialtype
3 Line1 Dialtone
4 Line2 Dialtone
5 Num of Retries
```

Command Menu/Dialer-Config/Telephone Line		
1. Line#1 Dialing Type Line#1 Dialing Type: [X] DTMF Dial	[X] DTMF Dial->Default [ ] Pulse Dial	Set the dialing type for line #1; this is the type recognized or preferred by the telephone company.

Command Menu/Dialer-Config/Telephone Line		
2. Line#2 Dialing Type Line#2 Dialing Type: [X] DTMF Dial	[X] DTMF Dial->Default [ ] Pulse Dial	Same as Line#1.
Command Menu/Dialer-Config/Telephone Line		
3. Line#1 wait for Dial tone Line#1 Wait Dialtone [X] ENABLE	[X] ENABLE ->Default [ ] DISABLE	Use this menu to let the system know whether or not to wait for a dial tone before dialing. Cell phone setup for the dialer requires that the system not wait for dial tone before dialing.
Command Menu/Dialer-Config/Telephone Line		
4.Line#2 wait for Dial tone Line#2 Wait Dialtone [X] ENABLE	[X] ENABLE ->Default [ ] DISABLE	Same as Line#1.
Command Menu/Dialer-Config/Telephone Line		
5.Number of retries Number of Retries: 06	06 ->Default	Set the number of retries for both line#1 and line#2. This function lets the dialer retry on either line if it is busy or not available. If the retry count expires, the panel reports a line trouble.

Note: Refer to section 11.2.1 on page 64 for detailed instructions on making menu selections.

11.11.3 Command Menu/Dialer Config-->Report Options

```
- Report Options -
1 Alarm Prio.
2 Trouble Prio.
3 Supv. Prio.
4 Aux Dis Report
5 Operation Mode
```

Command Menu/Dialer-Config/Report Options		

1.Alarm priority
`Alarm Priority:`
`[X] Account 1`
	`[X] Account 1->Default`
	`[ ] Account 2`
		Use this menu to set the account priority for reporting alarms. If the priority is set for account#1 then the dialer tries account#1 first for reporting.

Command Menu/Dialer-Config/Report Options		

2.Trouble priority
`Trouble Priority:`
`[X] Account 1`
	`[X] Account 1->Default`
	`[ ] Account 2`
		Use this menu to set the account priority for reporting trouble. If the priority is set for account#1 then the dialer tries account#1 first for reporting.

Command Menu/Dialer-Config/Report Options		

3.Supervisory priority
`SUPV Priority`
`[X] Account 1`
	`[X] Account 1->Default`
	`[ ] Account 2`
		Use this menu to set the account priority for reporting supervisory troubles. If the priority is set for account#1 then the dialer tries account#1 first for reporting.

Command Menu/Dialer-Config/Report Options		

4.Aux Disconnect, Cancels Alarm & Supv Reporting Thru dialer
`AuxDis Alm/Supv Rpt.`
`[X] DISABLE`
	`[ ] ENABLE`
	`[X] DISABLE ->Default`
		If this function is enabled, pressing AUXILIARY DISCONNECT (see section 9.4.6 on page 49) blocks the alarm and supervisory events from being reported through the built-in dialer.

Command Menu/Dialer-Config/Report Options		

5.Dialer operation mode
`Dialer Oper. Mode:`
`[X] (U)DACT`
	`[X] (U)DACT ->Default`
	`[ ] DACT`
		Use this menu to select the functionality of the dialer. In DACT mode only common trouble/alarm/supervisory are reported while in UDACT mode all point information is reported

Note: Refer to section 11.2.1 on page 64 for detailed instructions on making menu selections.

11.11.4 Command Menu/Dialer Config-->Time Parameters

```
 -Time Parameter-
1 AC-Loss Delay
2 Cellphone Date
3 Auto-Test Time
```

Command Menu/Dialer-Config/Time Parameter		

1.AC Loss delay
`AC-Loss Delay(Hrs)`
`0`
	`0 ->Default`	Use this menu to delay the reporting of AC loss trouble on the dialer for the programmed time period.

Command Menu/Dialer-Config/Time Parameter		

2.Cellular report date
`Cellular Report Date`
`0`
	`0 ->Default`	To comply with UL 864 10th edition, leave this setting at 0.
		Use this menu to set the test report date for the cell phone setup. Set this menu to 0 if there is no test reporting for a cell phone, or if the phone line is a regular line. Set this menu from 01 to 28 to schedule a test for Line 2 on a certain day of the month. See section 11.11.5 for more information.
		When a cell phone service is employed for the panel, it should only be connected to telephone line #2 CO interface. Also, the dial tone detection feature of Line 2 should be disabled for cell phone application.

Command Menu/Dialer-Config/Time Parameter		
3.Auto test time Auto-Test Time 00:30	00:30 ->Default	Use this function to set the time for the automatic test. When this test is performed, the test report is sent to the monitoring station. To comply with UL 864 9th edition and CAN/ULC-S559, this test must be performed at least once a day. To comply with UL 864 10th edition, this test must be performed at least once every 6 hours. The time is in 24 hour format, which means 00:30 is 30 minutes after midnight. The Auto test time can be configured to: 12:00 a.m. to 5:59 a.m.: test every 24 hours 3:00 a.m. to 5.59 a.m.: test every 3 hours 6:00 a.m. to 11:59 a.m.: test every 6 hours 12:00 p.m. to 23:59 p.m.: test every 12 hours If the Cellular report date is set to 0, then the test alternates between Line 1 and Line 2. See section 11.11.5 for more information.

11.11.5 Auto Test Time and Cellular Report Date

If the Cellular report date is set to 0, then the dialer alternates between Lines 1 and 2 when performing the automatic test. If the Cellular report date is not set to 0, then the automatic test is performed on Line 1 except on the Cellular report date, when it is performed on Line 2. See examples in the following table.

Table 16 Auto Test Time and Cellular Report Date

Cellular Report Date	Auto Test Time	Line 1 Tested	Line 2 Tested
0	00:30	12:30 a.m. every other day (alternates with Line 2)	12:30 a.m. every other day (alternates with Line 1)
0	3:00	3:00 a.m. 9:00 a.m. 3:00 p.m. 9:00 p.m.	6:00 a.m. 12:00 p.m. 6:00 p.m. 12:00 a.m.
0	6:00	6:00 a.m. and 6:00 p.m.	12:00 p.m. and 12:00 a.m.
0	12:00	12:00 p.m.	12:00 a.m.
15	00:30	12:30 a.m. every day except on the 15th of the month	12:30 a.m. on the 15th of the month
15	6:00	6:00 a.m., 12:00 p.m., 6:00 p.m., and 12:00 a.m. every day except on the 15th of the month	6:00 a.m., 12:00 p.m., 6:00 p.m., and 12:00 a.m. on the 15th of the month

Table 16 Auto Test Time and Cellular Report Date (Continued)

Cellular Report Date	Auto Test Time	Line 1 Tested	Line 2 Tested
15	12:00	12:00 p.m. and 12:00 a.m. every day except on the 15th of the month	12:00 p.m. and 12:00 a.m. on the 15th of the month

Note: Refer to section 11.2.1 on page 64 for detailed instructions on making menu selections.

11.11.6 Command Menu/Dialer Config-->Dialer Enable/Disable

Dialer Ena/Dis [X] ENABLE ------Warning------- Dialer Disabled!!!	[X] ENABLE ->Default [ ] DISABLE	The dialer is enabled by default. When the dialer is enabled or disabled, a warning message appears. **Warning:** The dialer cannot report any event to the monitoring station if it is disabled.

11.11.7 Command Menu/Dialer Config-->Ring Detect

-Ring Detect Number- [X]5	[ ] Disabled [ ] 1 [ ] 2 [ ] 3 [ ] 4 [X] 5->Default [ ] 6 [ ] 7 [ ] 8	Use this menu item to select the number of rings on which the panel's modem answers. The default number of rings is five. The maximum number of rings you can define is eight. If you select the "Disabled" option, the modem is disabled and the panel does not pick up the incoming call.

11.12 Test Dialer (Command-Menu)

```
   -Dialer Test-
1. L#1 Manual test
2. L#2 Manual test
3. Reset Dialer
```

`1.L#1 Manual test`	Press Enter to test Line #1. Press Cancel to exit this menu. For a description of test messages, see section 11.12.1 below.
`2.L#2 Manual test`	Press Enter to test Line #2. Press Cancel to exit this menu. For a description of test messages, see section 11.12.1 below.
`3.Reset Dialer`	This feature flushes all reportable events from the buffer. Press ENTER to reset the dialer. Press CANCEL to exit this menu.

11.12.1 Dialer Test Messages

The following messages appear during the test processes of Lines #1 and #2. The messages that appear depend on the status of the dialer and the test results that are found.

`Dialer idle now`	The dialer is checking the line for voltage. This message automatically displays when Manual Test is selected.
`No DC Volt`	No DC line voltage. The line is dead or no phone line is connected.
`Waiting for Dialtone`	The dialer is waiting for a dial tone.
`Failed: No Dialtone`	This message may indicate a noisy telephone line.
`Dialing Receiver Now`	The dial tone was received and telephone number dialing is in process.
`No DTMF tone`	This message indicates that the dialer failed to send a DTMF tone.

Waiting for Acktone	Waiting for availability of the receiver. The receiver confirms the availability by sending an acknowledgement tone.
Failed No Acktone	This message indicates that either the telephone number may be wrong or the receiver is not available.
Reporting Event Now	When sending events to the receiver, the display toggles between this message and “Waiting for Kissoff“ for all events sent.
Waiting for Kissoff	The dialer is waiting for the kissoff tone. The kissoff tone indicates that the receiver has received the event reports.
No Kissoff	No Kissoff means receiver has not received any event reports.
Passed: Manual test	The line passed the test; everything is OK.

11.13 Exit (Command-Menu)

Press ENTER after selecting EXIT from the main menu to return the panel to normal operation.

11.14 CFG-300 LCD service tool operation

If an LCD service tool is connected to the panel, you can view the latest message but you cannot scroll through the messages. In order to see all of the messages, enter the programming menu and view the event logs. The logs are arranged so that the most recent message is shown first. Listed below are the different kinds of messages that can appear on the LCD service tool.

11.15 Zone messages

Point annunciation is indicated on the LCD display. There are no separate queues for TROUBLE, ALARM, SUPERVISORY and BUILDING; instead there is only one queue that indicates all the events. The respective TROUBLE, ALARM, SUPERVISORY and BUILDING LEDs flash if at least one of the given types is in the queue.

The CFG-300 LCD service tool shows only the first alarm or trouble. If a trouble happens first and then an alarm happens, the alarm appears. Any further events change the total number of events, shown in the right hand corner of the LCD display. The order of priority is alarm, supervisory, trouble and property and building safety.

11.15.1 Example 1 (detection circuit)

Event 01 of 09, **OPEN TRB** on initiating circuit **Z-01** in the **EAST LOBBY ENTRANCE** with process type as **VERIFIED ALARM** and the event occurred on **2003/02/02** at **18:01 TUESDAY**.

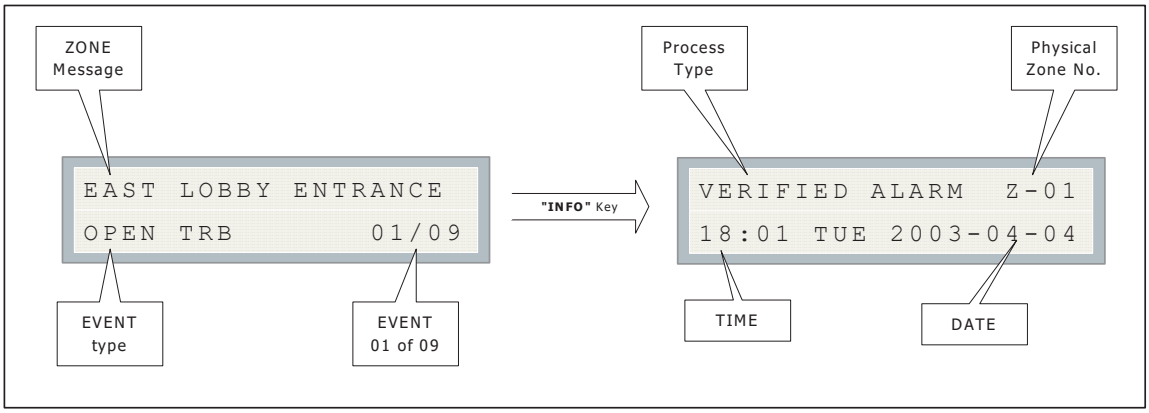

Figure 53 Detection circuit zone message

11.15.2 Example 2 (indicating circuit)

Event 02 of 09, **SHORT TRB** on indicating circuit **NAC-01** in the **EAST WING LOBBY** with process type as **SILENCEABLE** and the event occurred on **2003/02/02** at **18:01 TUESDAY**.

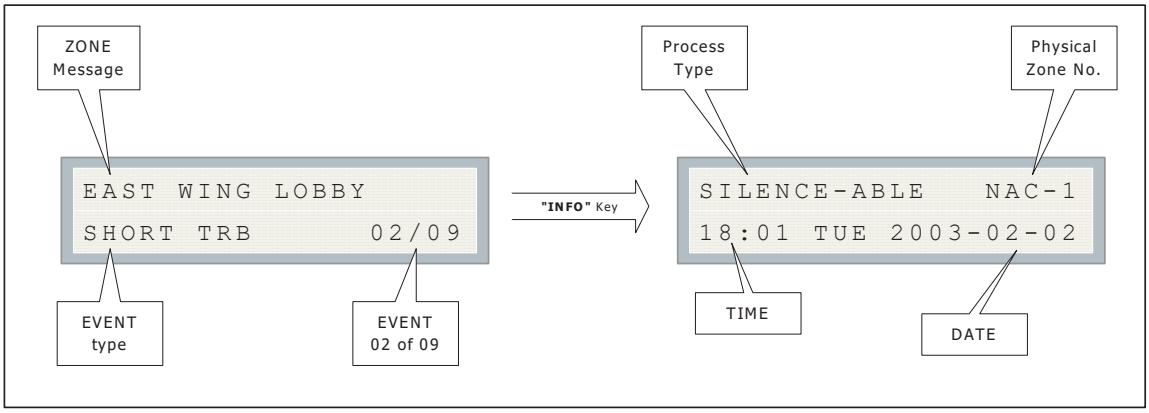

Figure 54 Indicating circuit zone message

Other common messages are described below.

11.16 AC Power Fail

The AC power fail trouble is generated when the power drops below the UL specified value. The trouble is restored when the power returns to the normal value.

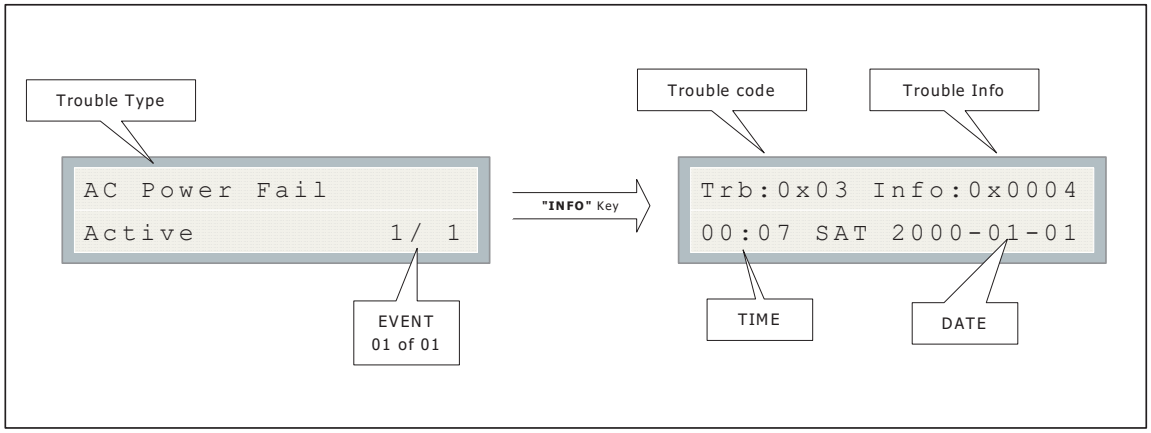

Figure 55 AC Power Fail

11.17 Battery trouble

The battery trouble is generated when the battery voltage drops below the specified value. The trouble is restored when the voltage returns to the normal value.

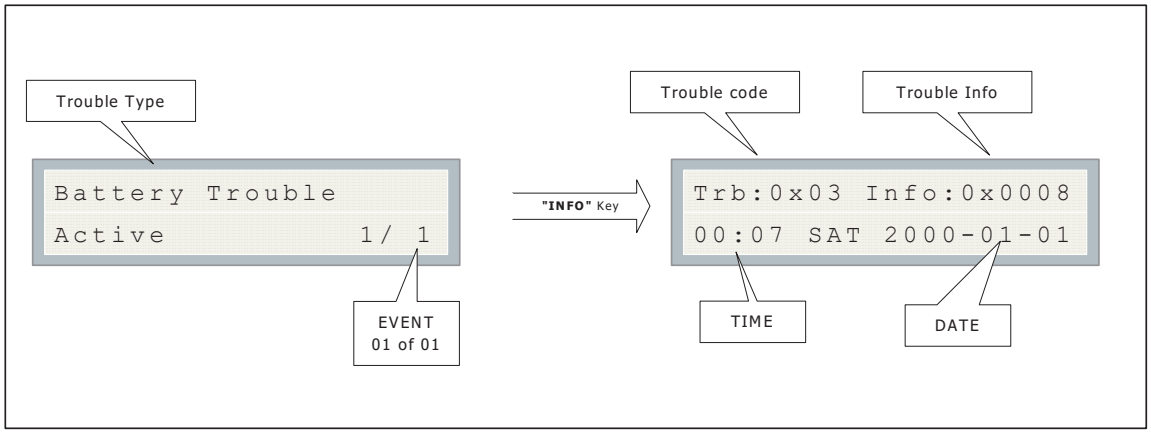

Figure 56 Battery Trouble

11.18 Ground Fault

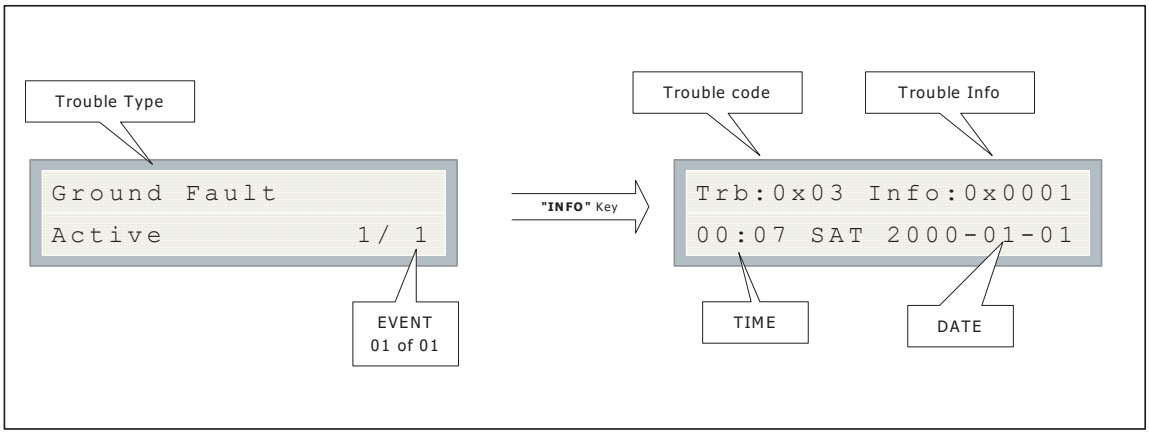

Figure 57 Ground Fault

Note: The trouble code and info is for trained service personnel only.

11.19 Remote Annunciator

Troubles related to the annunciator can have two possibilities: either the main panel and annunciator failed to communicate with each other, or an un-configured remote annunciator is responding to the main panel. In both the cases, the following trouble message is displayed:

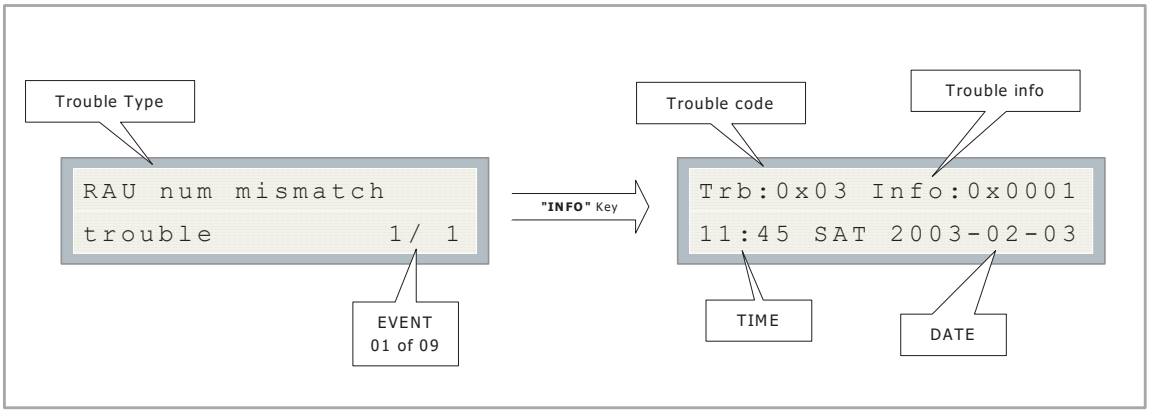

Figure 58 Remote annunciator mismatch trouble

11.20 Four-wire Smoke Detector Supply

The four-wire smoke detector supply is supervised for shorts. When a short is detected on a four-wire smoke supply the power is cut off and a trouble message is generated. Press the SYSTEM RESET button to restore the power the system. If the short is removed, the panel returns to normal; otherwise the trouble message remains.

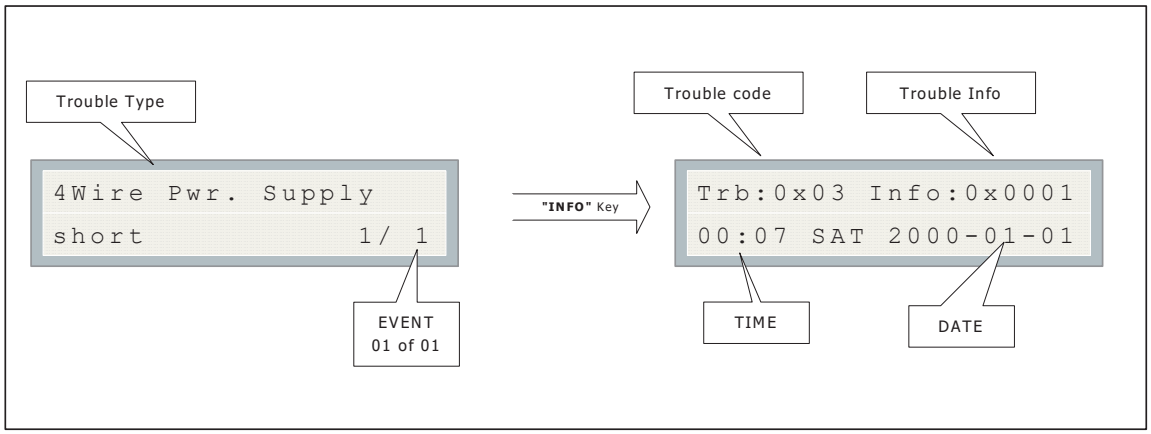

Figure 59 Four-wire Power Supply

Note: The trouble code and info is for trained service personnel only.

11.21 Supervised Aux. Supply

The supervised auxiliary supply is supervised for shorts. When a short is detected on supervised auxiliary supply the power is cut off and a trouble message is generated. Press the SYSTEM RESET button to restore the power the system. If the short is removed, the panel returns to normal; otherwise the trouble message remains.

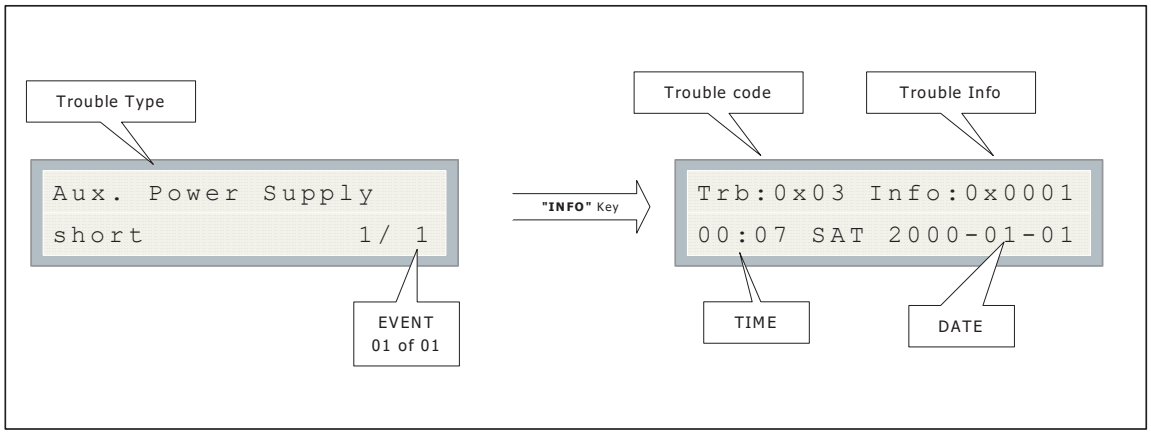

Figure 60 Aux. Power Supply

11.22 City Tie Polarity reversal - PR-300/ Relay module

The city tie or polarity reversal module is supervised for open and whether or not the PR-300 is plugged in. The relay module is supervised for whether or not it is plugged in.

If any of the modules are not plugged in, the following trouble message appears:

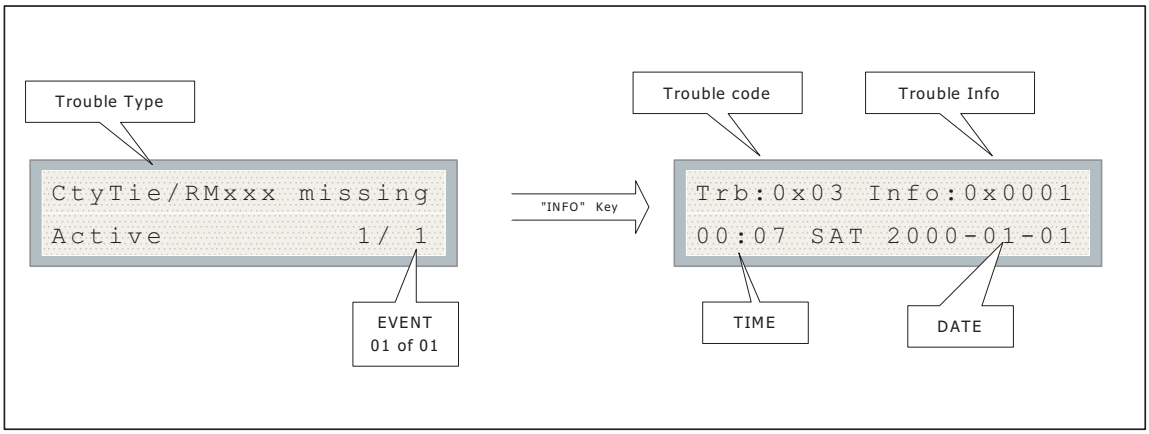

Figure 61 City Tie module missing

If there is an open detected on the city tie output, the following trouble message appears:

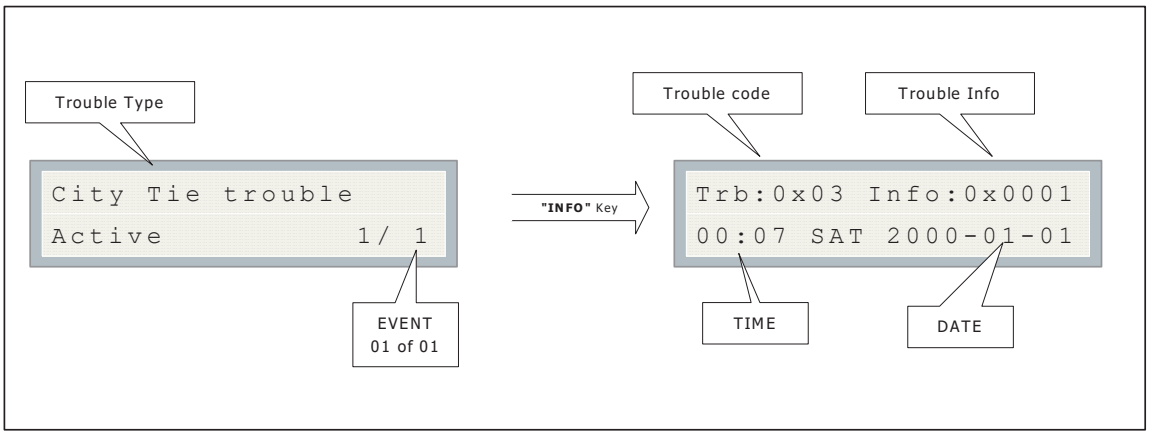

Figure 62 City Tie trouble

12.0 Appendix A: Compatible Receivers

The dialers that are built into select models of the FA-300 LED Series Fire Alarm Control Panels are compatible with the following Digital Alarm Communicator Receivers (DACR):

DACR Receiver Model	Protocols
SurGard MLR2 Multi-Line Receiver (ULC, ULI)	SIA-DCS and Ademco Contact ID
SurGard SLR Single-Line Receiver (ULC, ULI)	SIA-DCS and Ademco Contact ID
Osborne-Hoffman Quickalert! II Receiver (ULI)	SIA-DCS and Ademco Contact ID
Osborne-Hoffman OH-2000 Receiver (ULI)	SIA-DCS and Ademco Contact ID
Silent Knight Model 9500 Receiver (ULI)	SIA-DCS and Ademco Contact ID
Radionics Model D6500 Receiver (ULI)	SIA-DCS and Ademco Contact ID
Radionics Model D6600 Receiver (ULI)	SIA-DCS and Ademco Contact ID
DSC SurGard System III Receiver (ULC, ULI)*	SIA Contact ID
DSC SurGard System IV Receiver (ULC, ULI)*	SIA Contact ID

Note: * When used with DSC 3G4010 or 3G4010CF Universal Wireless Alarm Communicator through wireless IP connection.

13.0 Appendix B: Reporting

13.1 Ademco Contact-ID

13.1.1 FA-300 Event Codes

Event Description	Event Family	Qualifier	Code	Group #	Contact #
Phone Line #1 trouble detected	Trouble	New event	1 351	00	000
Phone Line #2 trouble detected	Trouble	New event	1 352	00	000
Phone Line #1 trouble restored	Trouble	Restore	3 351	00	000
Phone Line #2 trouble restored	Trouble	Restore	3 352	00	000
Failure to report to an Account	Trouble	New event	1 354	Acct #	Acct #
Report to an Account successful	Trouble	Restore	3 354	Acct #	Acct #
Periodic (24 hr) Test Event (NORMAL)	Test	New event	1 602	00	000
Periodic (24 hr) Test Event (OFF NORMAL)	Test	New event	1 608	00	000
Manually initiated dialer test	Test	New event	1 601	00	000
Zone Fire Alarm	Alarm	New event	1 110	00	000
Zone Fire Alarm restored	Alarm	Restore	3 110	00	000
Zone Trouble detected	Trouble	New event	1 300	00	000
Zone Trouble restored	Trouble	Restore	3 300	00	000
Zone Supervisory condition	Supervisory	New event	1 200	00	000
Zone Supervisory restored	Supervisory	Restore	3 200	00	000
Waterflow	Alarm	New event	1 113	00	000
Waterflow restored	Alarm	Restore	3 113	00	000
Indicating Zone Trouble	Trouble	New event	1 320	00	000
Indicating Zone Trouble restored	Trouble	Restore	3 320	00	000
AC power lost	Trouble	New event	1 301	00	000
AC power restored	Trouble	Restore	3 301	00	000
Battery Low	Trouble	New event	1 302	00	000
Battery Low restored	Trouble	Restore	3 302	00	000
Ground Fault	Trouble	New event	1 310	00	000
Ground Fault restored	Trouble	Restore	3 310	00	000

13.2 Security Industries Association SIA-DCS

SIA protocol does not define indicating zone troubles, but lists it as Untyped Zone Trouble/ Restore.

13.2.1 FA-300 Event Codes

Event Description	Event Family	Qualifier	SIA Event Code	Parameter
Phone Line #1 trouble detected	Trouble	New event	LT	001
Phone Line #2 trouble detected	Trouble	New event	LT	002
Phone Line #1 trouble restored	Trouble	Restore	LR	001
Phone Line #2 trouble restored	Trouble	Restore	LR	002
Failure to report to an Account	Trouble	New event	RT	Acct #
Report to an Account successful	Trouble	Restore	YK	Acct #
Periodic (24 hr) Test Event (Normal)	Test	New event	RP	000
Periodic (24 hr) Test Event (Off-normal)	Test	New event	RY	000
Manually initiated dialer test	Test	New event	RX	000
Zone Fire Alarm	Alarm	New event	FA	000
Zone Fire Alarm restored	Alarm	Restore	FH	000
Zone Trouble detected	Trouble	New event	FT	000
Zone Trouble restored	Trouble	Restore	FJ	000
Zone Supervisory condition	Supervisory	New event	FS	000
Zone Supervisory restored	Supervisory	Restore	FR	000
Waterflow alarm	Alarm	New event	WA	000
Waterflow alarm restored	Alarm	Restore	WH	000
Indicating Zone Trouble (*)	Trouble	New event	UT	000
Indicating Zone Trouble restored (*)	Trouble	Restore	UR	000
AC power lost	Trouble	New event	AT	000
AC power restored	Trouble	Restore	AR	000
Battery Low	Trouble	New event	YT	000
Battery Low restored	Trouble	Restore	YR	000
Ground Fault	Trouble	New event	YP	000
Ground Fault restored	Trouble	Restore	YQ	000

14.0 Appendix C: Specifications

Table 17 FA-300 LED Series Specifications

FA-300 LED Fire Control Panel Chassis		
General	Digital Signal Processor based design. Fully configurable using front panel LCD display with Password Access.	
Indicating (NAC) Circuits	4 supervised Class B or Class A indicating circuits, configured as strobes or audibles. Terminals are labeled **SIG**. Power limited / Regulated 24VDC FWR / 1.7A @ 49C per circuit	
Initiating Circuits	12 supervised Class B initiating circuits, configurable (normal or verified). Terminals are labeled **DET**. Compatibility ID **A** Power limited / 19VDC reg. / 3mA for detectors / 0.15Vp-p ripple / 40mA max (alarm short)	
RS-485 Connection	For Remote Annunciators. Terminals are labeled RS485.	
Electrical ratings	**AC line voltage**	120 VAC 60 Hz 3 Amp \ 240 VAC 50 Hz 1.5Amp (primary)
	Power Supply Rating	6 Amp maximum panel (loading)
	Max power allowed	• 5Amp (Total NAC loading) • 1.7Amp (aux power unfiltered) • 0.5Amp (aux power filtered) • 0.3Amp (resettable auxiliary power)
	Panel Current consumption	Standby: 283mA Alarm: 560mA
Unfiltered supply **(full wave rectified)**	Special Application Power limited / 24VFWR unfiltered / 1.7Amp max at 49C See Appendix E: Auxiliary Devices on page 103.	
Aux supply (non resettable)	Special Application Power limited / 22.3VDC nominal / 500mA max Class B when powers remote annunciators See Appendix E: Auxiliary Devices on page 103.	
4-wire smoke supply (resettable)	Special Application Power limited / 22.3VDC nominal / 300mA max Class B when EOL relay is used See FA-100 section for compatible Four Wire Smoke Detectors in LT-1007 - Device Compatibility Guide	
Auxiliary relays (resistive loads)	**Must be connected to a listed power limited source of supply. Terminals are labeled ALARM, TROUBLE, SUPV and AUX.**	
	Common Alarm	Form C, 1 A max, 28 VDC
	Common Supv	Form C, 1 A max, 28 VDC

Table 17 FA-300 LED Series Specifications (Continued)

FA-300 LED Fire Control Panel Chassis		
	Common Trouble	Form C, 1 A max, 28 VDC
	Aux Relay	Form C, 1 A max, 28 VDC
Testing impedance	2 kΩ ground fault 1 MΩ open 0.1 Ω short	
Battery	**Type**	24VDC Sealed Lead Acid, 12 AH
	Charging capability	1.25 Amp
	Protection	10A on board (F1) slow blow micro fuse
Compliance	**System Model**	FA-300 LED Series LED Version Fire Alarm Control Panel
	System Type	Local, Auxiliary (using PR-300), Remote Protected Premises Station (using PR-300 or FA-301-12LDR, FA-301-12LDW, or FA-301-8LDW) Central Station Protected Premises (using FA-301-12LDR, FA-301-12LDW, or FA-301-8LDW).
	Type of Service	A, M, WF, SS
	Type of Signaling	Non-Coded
	Applicable Standards	NFPA 70 and 72, UL 864, ULC-S524, ULC- S527, ULC-S559

Table 18 FA-300 LED System Modules and Annunciators

FA-300 LED Series Modules and Annunciators		
RM-312/RM-306	Relay Adder Module	Must be connected to a listed power-limited source of supply.
	Contact rating	NO / NC / 28VDC per contact / 1A resistive load max
	Current consumption	standby 0mA, alarm RM-312 160mA, RM-306 80mA
ICAC-306	Input Class A Converter module	standby: 0mA / alarm: 0mA
OCAC-304	Output Class A Converter Module	standby: 0mA / alarm: 0mA
OCAC-302	Output Class A Converter module	Standby 0mA / alarm 0mA

Table 18 FA-300 LED System Modules and Annunciators (Continued)

FA-300 LED Series Modules and Annunciators		
SRM-312R/ SRM-312W	Smart Relay Module	Must be connected to a listed power-limited source of supply ***Contact rating*** FormC/ 28VDC per contact / 1A resistive load max, zoned ***Current consumption*** standby 30mA / alarm 140mA
	Contact rating	FormC/ 28VDC per contact / 1A resistive load max, zoned
	Current consumption	standby 30mA, alarm 140mA
RAM-300LCDR/ RAM-300LCDW	**Remote LCD Annunciator**	Standby 56mA / alarm 65mA
RAM-208	8 Zone Remote Annunciator	Standby 35mA / alarm 90mA
PR-300	Polarity Reversal and City Tie Module	
	City Tie	power limited / 24VDC unfiltered / 250mA max /14Ohms trip coil
	Polarity Reversal	power limited / 24VDC open / 12VDC at 3.5mA / 8.5mA max (shorted)
	Polarity Reversal Supv. Terminal	24VDC (normal) / −24VDC (supervisory) / 0V (trouble)
	Polarity Reversal Alarm Terminal	24VDC (normal) / −24VDC (alarm) / 0V (trouble)
	Current Consumption	standby 50mA / alarm 300mA (city tie in use) / alarm 70mA (city tie not in use)
RTI-1	Remote Trouble Indicator	Standby 35mA / alarm 35mA

15.0 Appendix D: Power Supply and Battery Calculations

Use the form below to determine the required secondary power supply (batteries).

IMPORTANT NOTICE

The main AC branch circuit connection for Fire Alarm Control Panel must provide a dedicated continuous power without provision of any disconnect devices. Use #12 AWG wire with 600-volt insulation and proper over-current circuit protection that complies with the local codes. Refer to *Appendix A* for specifications.

POWER REQUIREMENTS (ALL CURRENTS ARE IN AMPERES)

Model Number	Description	Qty		Standby	Total Standby	Alarm	Total Alarm
FA-301-12LW	Fire Alarm Control Panel, 12 Det, FIXED ELR/**ACTIVE ELR**		X	0.164/**0.104**	=	0.424/**0.364**	=
FA-301-12LDW/ FA-301-12LDR	Fire Alarm Control Panel, 12 Det with UDACT FIXED ELR/**ACTIVE ELR**		X	0.164/**0.104**	=	0.424/**0.364**	=
FA-301-8LW	Fire Alarm Control Panel, 8 Det FIXED ELR/**ACTIVE ELR**		X	0.136/**0.096**	=	0.366/**0.326**	=
FA-301-8LDW	Fire Alarm Control Panel, 8 Det with UDACT FIXED ELR/**ACTIVE ELR**		X	0.136/**0.096**	=	0.366/**0.326**	=
ICAC-306	Det Class A Converter Adder Module		X	0.000	=	0.000	=
OCAC-304	Sig Class A Converter Adder Module--4 Circuits		X	0.000	=	0.000	=
OCAC-302	Sig Class A Converter Adder Module--2 Circuits		X	0.000	=	0.000	=
PR-300	Polarity Reversal and City Tie Module		X	0.050	=	0.300	=
RM-312/ RM-306	12 Relay or 6 Relay Adder Module		X	0.000	=	0.160/**0.080**	=
SRM-312R/ SRM-312W	12 Relay Smart Relay Module		X	0.030	=	0.140	=
RAM-300LCDR/ RAM-300LCDW	Smart Remote Annunciator		X	0.056	=	0.065	=
RAM-208/RAM-216	Remote Annunciators		X	0.035	=	0.090	=
RTI-1	Remote Trouble Indicator		X	0.035	=	0.035	=
Two-Wire Smoke Detectors			X	✷ 0.00011	=	* 0.090	= 0.090
Four-Wire Smoke Detectors			X		=		=
Signal Load (bells, horns, strobes, and etc.)			X				=
Auxiliary Power Supply for Annunciators, etc.					=	ALARM	=
Total currents (Add above currents)	STANDBY				(**A**)		(**B**)

* Assume three Initiating Circuits are in alarm.
' Use **0.084** for five minutes of alarm as a multiplier figure.
✷ Using the Mircom MPD-65P 2-wire photoelectric smoke detector. See Device Compatibility Guide LT1007.
Total Current Requirement: ALARM (**B**)_____ Amp. (Value obtained from column **B**)
Battery Capacity Requirement:
([STANDBY (**A**) _____] X [(24 or 60 Hours) ___]**)** + **(**[ALARM (**B**) _____] X [Alarm in Hr.] _____**)** = (**C**) _____AH
Total Alarm Current: Must be 6 Amperes or less for FA-300 LED Series. Indicating Circuits must not to exceed 5 Amperes.
Battery Selection: Multiply (**C**) by 1.25 to derate battery.

16.0 Appendix E: Auxiliary Devices

Model	Description
RAM-300LCDW	Remote Annunciator module, LCD display, white painted box
RAM-300LCDR	Remote Annunciator module, LCD display, red painted box
SRM-312W	Smart Relay Module (12 relays) with white enclosure
SRM-312R	Smart Relay Module (12 relays) with red enclosure
RAM-208	8 Zone remote annunciator with white enclosure
RAM-208R	8 Zone remote annunciator with red enclosure
RAM-216	16 Zone remote annunciator with white enclosure
RAM-216R	16 Zone remote annunciator with red enclosure
RAM-1016TZDS	Remote Annunciator with 16 bi-colored LEDs and 16 trouble LEDs
RAM-1032TZDS	Remote Annunciator with 32 bi-colored LEDs and 32 trouble LEDs
PCS-100	Power Supply for DCS Radio

17.0 Warranty and Warning Information

WARNING!

Please read this document **CAREFULLY**, as it contains important warnings, life-safety, and practical information about all products manufactured by the Mircom Group of Companies, including Mircom and Secutron branded products, which shall include without limitation all fire alarm, nurse call, building automation and access control and card access products (hereinafter individually or collectively, as applicable, referred to as "**Mircom System**").

NOTE TO ALL READERS:

1. **Nature of Warnings.** The within warnings are communicated to the reader out of an abundance of caution and create no legal obligation for Mircom Group of Companies, whatsoever. Without limiting the generality of the foregoing, this document shall NOT be construed as in any way altering the rights and obligations of the parties, governed by the legal documents that apply in any given circumstance.
2. **Application.** The warnings contained in this document apply to all Mircom System and shall be read in conjunction with:
   a. the product manual for the specific Mircom System that applies in given circumstances;
   b. legal documents that apply to the purchase and sale of a Mircom System, which may include the company's standard terms and conditions and warranty statements;
   c. other information about the Mircom System or the parties' rights and obligations as may be application to a given circumstance.
3. **Security and Insurance.** Regardless of its capabilities, no Mircom System is a substitute for property or life insurance. Nor is the system a substitute for property owners, renters, or other occupants to act prudently to prevent or minimize the harmful effects of an emergency situation. Building automation systems produced by the Mircom Group of Companies are not to be used as a fire, alarm, or life-safety system.

NOTE TO INSTALLERS:

All Mircom Systems have been carefully designed to be as effective as possible. However, there are circumstances where they may not provide protection. Some reasons for system failure include the following. As the only individual in contact with system users, please bring each item in this warning to the attention of the users of this Mircom System. Failure to properly inform system end-users of the circumstances in which the system might fail may result in over-reliance upon the system. As a result, it is imperative that you properly inform each customer for whom you install the system of the possible forms of failure:

4. **Inadequate Installation.** All Mircom Systems must be installed in accordance with all the applicable codes and standards in order to provide adequate protection. National standards require an inspection and approval to be conducted by the local authority having jurisdiction following the initial installation of the system and following any changes to the system. Such inspections ensure installation has been carried out properly.
5. **Inadequate Testing.** Most problems that would prevent an alarm a Mircom System from operating as intended can be discovered by regular testing and maintenance. The complete system should be tested by the local authority having jurisdiction immediately after a fire, storm, earthquake, accident, or any kind of construction activity inside or outside the premises.

The testing should include all sensing devices, keypads, consoles, alarm indicating devices and any other operational devices that are part of the system.

NOTE TO USERS:

All Mircom Systems have been carefully designed to be as effective as possible. However, there are circumstances where they may not provide protection. Some reasons for system failure include the following. The end user can minimize the occurrence of any of the following by proper training, testing and maintenance of the Mircom Systems:

6. **Inadequate Testing and Maintenance.** It is imperative that the systems be periodically tested and subjected to preventative maintenance. Best practices and local authority having jurisdiction determine the frequency and type of testing that is required at a minimum. Mircom System may not function properly, and the occurrence of other system failures identified below may not be minimized, if the periodic testing and maintenance of Mircom Systems is not completed with diligence and as required.
7. **Improper Operation.** It is important that all system users be trained in the correct operation of the alarm system and that they know how to respond when the system indicates an alarm. A Mircom System may not function as intended during an emergency situation where the user is unable to operate a panic or emergency switch by reason of permanent or temporary physical disability, inability to reach the device in time, unfamiliarity with the correct operation, or related circumstances.
8. **Insufficient Time.** There may be circumstances when a Mircom System will operate as intended, yet the occupants will not be protected from the emergency due to their inability to respond to the warnings in a timely manner. If the system is monitored, the response may not occur in time enough to protect the occupants or their belongings.
9. **Carelessness or Safety Hazards.** Moreover, smoke detectors may not provide timely warning of fires caused by carelessness or safety hazards such as smoking in bed, violent explosions, escaping gas, improper storage of flammable materials, overloaded electrical circuits or children playing with matches or arson.
10. **Power Failure.** Some Mircom System components require adequate electrical power supply to operate. Examples include: smoke detectors, beacons, HVAC, and lighting controllers. If a device operates only by AC power, any interruption, however brief, will render that device inoperative while it does not have power. Power interruptions of any length are often accompanied by voltage fluctuations which may damage Mircom Systems or other electronic equipment. After a power interruption has occurred, immediately conduct a complete system test to ensure that the system operates as intended.
11. **Battery Failure.** If the Mircom System or any device connected to the system operates from batteries it is possible for the batteries to fail. Even if the batteries have not failed, they must be fully charged, in good condition, and installed correctly. Some Mircom Systems use replaceable batteries, which have a limited life-span. The expected battery life is variable and in part dependent on the device environment, usage and type. Ambient conditions such as high humidity, high or low temperatures, or large temperature fluctuations may reduce the expected battery life. Moreover, some Mircom Systems do not have a battery monitor that would alert the user in the event that the battery is nearing its end of life. Regular testing and replacements are vital for ensuring that the batteries function as expected, whether or not a device has a low-battery monitor.
12. **Physical Obstructions.** Motion sensors that are part of a Mircom System must be kept clear of any obstacles which impede the sensors' ability to detect movement. Signals being communicated by a Mircom System may not reach the receiver if an item (such as metal, water, or concrete) is placed on or near the radio path. Deliberate jamming or other inadvertent radio signal interference can also negatively affect system operation.

13. **Wireless Devices Placement Proximity.** Moreover all wireless devices must be a minimum and maximum distance away from large metal objects, such as refrigerators. You are required to consult the specific Mircom System manual and application guide for any maximum distances required between devices and suggested placement of wireless devices for optimal functioning.
14. **Failure to Trigger Sensors.** Moreover, Mircom Systems may fail to operate as intended if motion, heat, or smoke sensors are not triggered.
    a. Sensors in a fire system may fail to be triggered when the fire is in a chimney, walls, roof, or on the other side of closed doors. Smoke and heat detectors may not detect smoke or heat from fires on another level of the residence or building. In this situation the control panel may not alert occupants of a fire.
    b. Sensors in a nurse call system may fail to be triggered when movement is occurring outside of the motion sensors' range. For example, if movement is occurring on the other side of closed doors or on another level of the residence or building the motion detector may not be triggered. In this situation the central controller may not register an alarm signal.
15. **Interference with Audible Notification Appliances.** Audible notification appliances may be interfered with by other noise sources such as stereos, radios, televisions, air conditioners, appliances, or passing traffic. Audible notification appliances, however loud, may not be heard by a hearing-impaired person.
16. **Other Impairments.** Alarm notification appliances such as sirens, bells, horns, or strobes may not warn or waken a sleeping occupant if there is an intervening wall or door. It is less likely that the occupants will be alerted or awakened when notification appliances are located on a different level of the residence or premise.
17. **Software Malfunction.** Most Mircom Systems contain software. No warranties are provided as to the software components of any products or stand-alone software products within a Mircom System. For a full statement of the warranties and exclusions and limitations of liability please refer to the company's standard Terms and Conditions and Warranties.
18. **Telephone Lines Malfunction.** Telephone service can cause system failure where telephone lines are relied upon by a Mircom System. Alarms and information coming from a Mircom System may not be transmitted if a phone line is out of service or busy for a certain period of time. Alarms and information may not be transmitted where telephone lines have been compromised by criminal tampering, local construction, storms or earthquakes.
19. **Component Failure.** Although every effort has been made to make this Mircom System as reliable as possible, the system may fail to function as intended due to the failure of a component.
20. **Integrated Products.** Mircom System might not function as intended if it is connected to a non-Mircom product or to a Mircom product that is deemed non-compatible with a particular Mircom System. A list of compatible products can be requested and obtained.

Warranty

Purchase of all Mircom products is governed by:

https://www.mircom.com/product-warranty

https://www.mircom.com/purchase-terms-and-conditions

https://www.mircom.com/software-license-terms-and-conditions

CANADA - Main Office
25 Interchange Way
Vaughan, ON L4K 5W3
Tel: (905) 660-4655
(888) 660-4655
Fax: (905) 660-4113

U.S.A
4575 Witmer Industrial Estates
Niagara Falls, NY 14305
Tel: (905) 660-4655
(888) 660-4655
Fax: (905) 660-4113

© Mircom 2023
Printed in Canada
Subject to change without prior notice

www.mircom.com