User Manual

Indoor/outdoor wiring Splitter
VX-SP

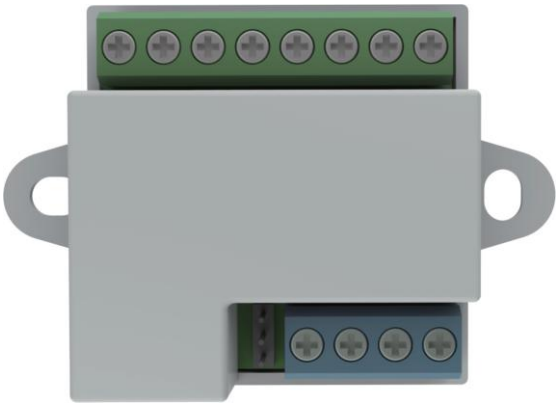

Copyright November 2026

1. Packing Contents

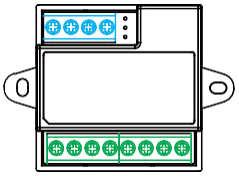

Main Body

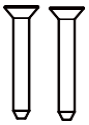

KA M3*20mm
Mounting Screw

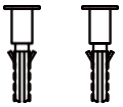

M3*20mm
Plastic Expansion Pipe

2. Name And Function of Each Part

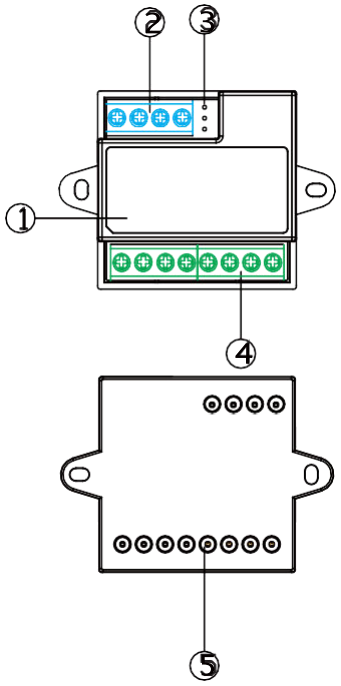

NO.	Part Name
1	Front shell
2	Input-blue connector
3	Impedance switch
4	Output-green connector
5	Back cover

NOTE: This device is used for extending the star diagram for some buildings

3. Installation

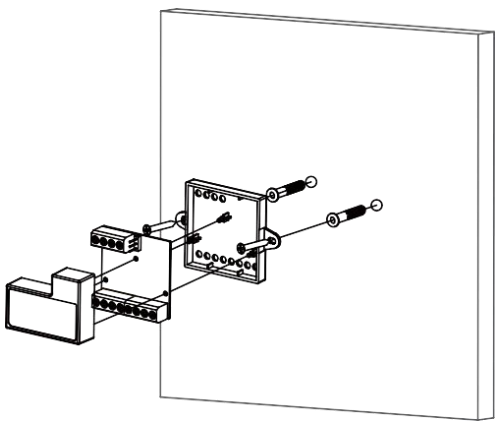

4.System Connection Diagram

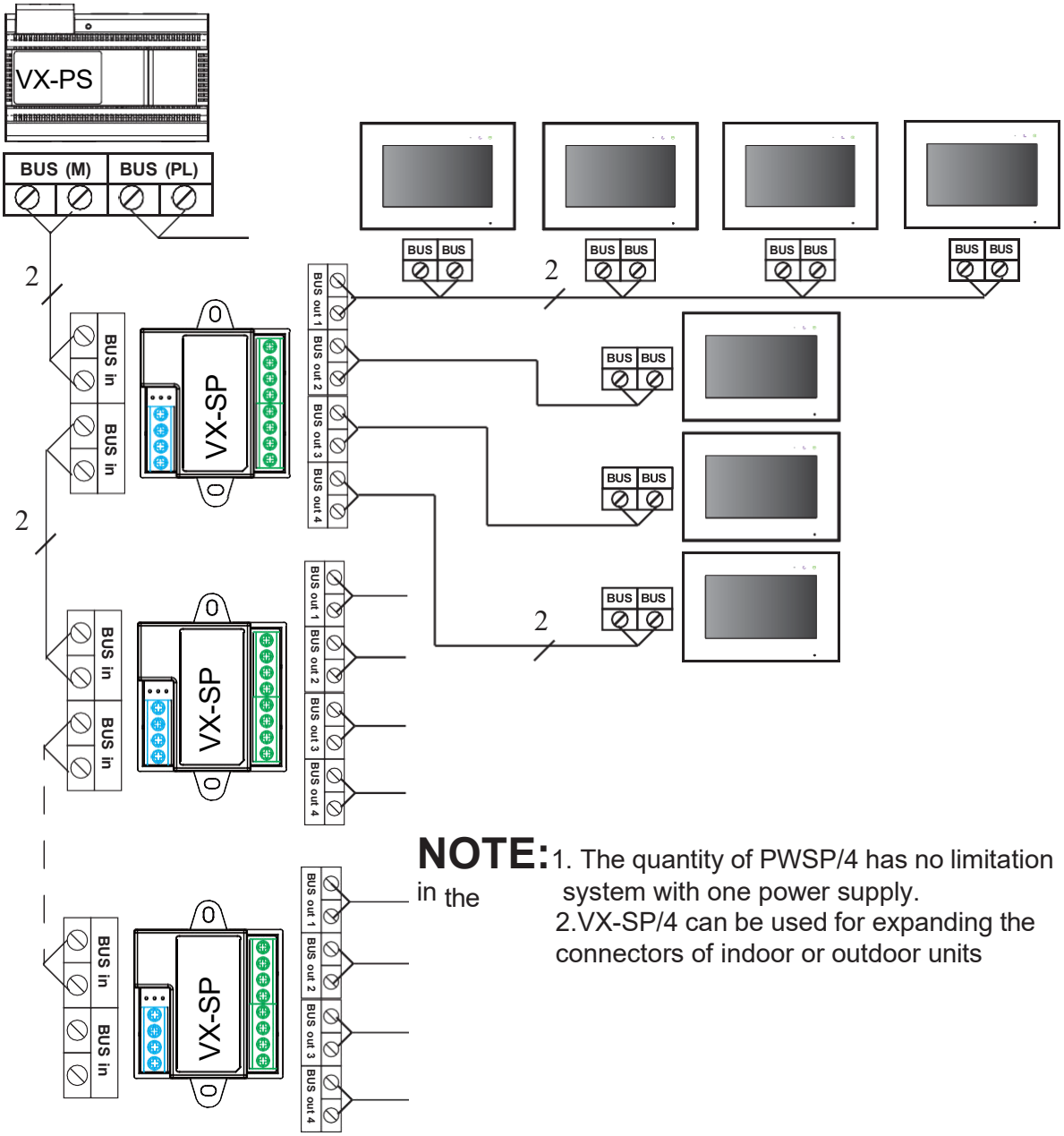

NOTE: 1. The quantity of PWSP/4 has no limitation in the system with one power supply.
2.VX-SP/4 can be used for expanding the connectors of indoor or outdoor units

5.Specification

Channel	2 inputs & 4 outputs
Power	from bus
Dimension(mm)	44(w)*44(h)*21(d)
Working Temperature	-10℃~40℃